This file is provided FREE OF CHARGE from the electromaniacs.com community
You are free to distribute this file to other persons who needs it , but without of charge

Also on http://electromaniacs.com you can find thousands of service manuals , schematics free of charge

SHARP®

SERVICE MANUAL

SE0028JW73H00
Issued: 21st May 2002

GA-20 CHASSIS

PAL I SYSTEM COLOUR TELEVISION

RTV servis Horvat
Tel: ++385-31-856-842
Tel/fax: ++385-31-856-139
Mob: 098-788-319
www.rtv-horvat-dj.hr

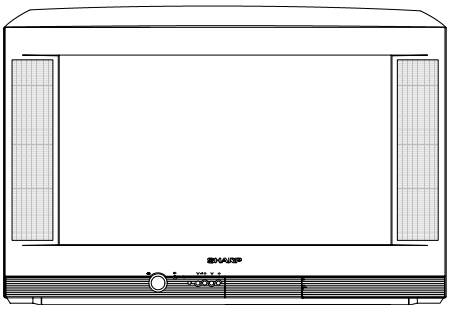

MODEL 28JW-73H

In the interests of user safety (required by safety regulations in some countries) the set should restored to its original condition and only parts identical to those specified should be used.

CONTENTS

ELECTRICAL SPECIFICATIONS 3
IMPORTANT SERVICING NOTES 4
CONTROLS & TERMINALS 5
ADJUSTMENT PROCEDURES 7
POSTCODE RESET 11
LED FLASHING CODES 12
PRINTED WIRING BOARDS 13
CHASSIS LAYOUT 19
ICs ADDITIONAL INFORMATION 21
SCHEMATIC DIAGRAMS 36
TROUBLESHOOTING TABLES 49
PARTS LISTING 52
PACKING OF THE SET & ACCESSORIES ... 61
SOURCE OF DOCUMENTATION 62

SHARP CORPORATION

www.rtv-horvat-dj.hr

This document has been published to be used for after sales service only.

TDA7480 (IC301,IC302)

ELECTRICAL CHARACTERISTICS (Refer to the test circuit, V_{CC} = ±14V; R_L = 8Ω; R_S = 50Ω; R_f = 12KΩ; Demod.. filter L = 60µH, C = 470nF; f = 1KHz; T_{amb} = 25°C unless otherwise specified.)

Symbol	Parameter	Test Condition	Min.	Typ.	Max.	Unit
V_S	Supply Range		±10		±16	V
I_q	Total Quiescent Current	R_L = ∞; NO LC Filter		25	40	mA
V_{OS}	Output Offset Voltage	Play Condition	–50		+50	mV
P_O	Output Power	THD = 10% THD = 1%	8.5 6	10 7		W W
		R_L = 4Ω V_{CC} = ±10.5V THD = 10% THD = 1%		 10 7		 W W
P_d (*)	Dissipated Power at 1W Output Power	R_f = 12KΩ P_O = 1W		1		W
P_{DMAX}	Maximum Dissipated Power	P_O = 10W THD 10% $R_{th\text{-}j\text{-}amb}$ = 38°C/W (Area 12cm^2)		1.8		W
η	Efficiency ≡ $\frac{P_O}{P_O + P_D} \equiv \frac{P_O}{P_I}$ (**)	THD 10% $R_{th\text{-}j\text{-}amb}$ = 38°C/W (Area 12cm^2)	80	85		%
THD	Total Harmonic Distortion	R_L = 8Ω; P_O = 0.5W		0.1		%
I_{max}	Overcurrent Protection Threshold	R_L = 0	3.5	5		A
T_j	Thermal Shut-down Junction Temperature			150		°C
G_V	Closed Loop Gain		29	30	31	dB
e_N	Total Input Noise	A Curve f = 20Hz to 22KHz		7 12		µV µV
R_i	Input Resistance		20	30		KΩ
SVR	Supply Voltage Rejection	f = 100Hz; V_r = 0.5	46	60		dB
T_r, T_f	Rising and Falling Time			50		ns
R_{DSON}	Power Transistor on Resistance			0.4		Ω
F_{SW}	Switching Frequency		100	120	140	KHz
F_{SW_OP}	Switching Frequency Operative Range		100		200	KHz
B_F	Zero Signal Frequency Constant (***)			1.4x10^9		HzΩ
R_F	Frequency Controller Resistor Range (****)		7	12	14	KΩ
MUTE & STAND-BY FUNCTIONS						
$V_{ST\text{-}BY}$	Stand-by range				0.8	V
V_{MUTE}	Mute Range		1.8		2.5	V
V_{PLAY}	Play Range (1)		4			V
A_{MUTE}	Mute Attenuation		60	80		dB
$I_{qST\text{-}BY}$	Quiescent Current @ Stand-by			3	5	mA

*: The output average power when the amplifier is playing music can be considered roughly 1/10 of the maximum output power. So it is useful to consider the dissipated power in this condition for thermal dimensioning.

**: P_O = measured across the load using the following inductor:
COIL 58120 MPPA2 (magnetics) TURNS: 28 ∅ 1mm
COIL77120 KOOL Mµ (magnetics) TURNS: 28 ∅ 1mm

***: The zero-signal switching frequency can be obtained using the following expression: $F_{SW} = B_F/R_F$

****: The maximum value of R_F is related to the maximum possible value for the voltage drop on R_F itself.

(1): For V_{12} >5.2V, an input impedance of 10KΩ is to be considered.

www.rtv-horvat-dj.hr

MSP3410G (IC301)

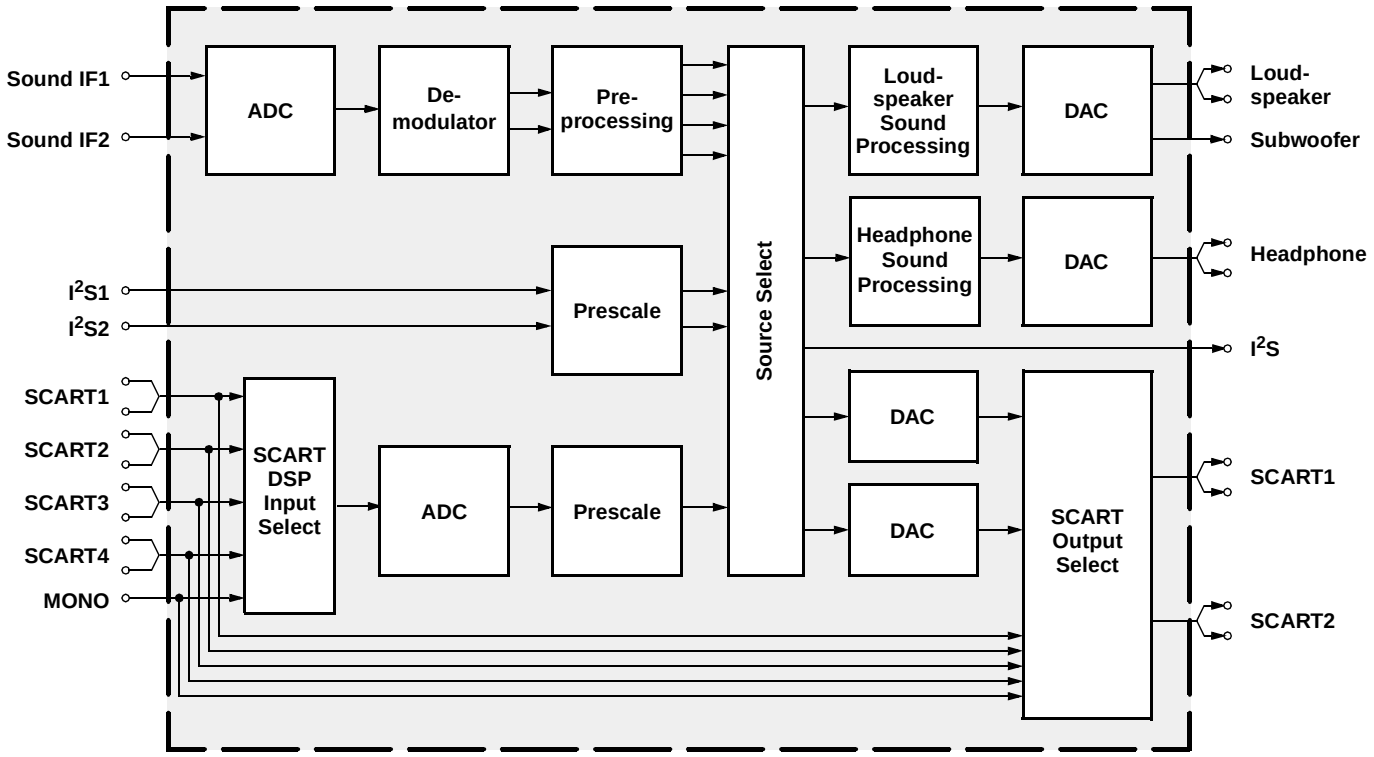

Simplified functional block diagram of the MSP 34x0G

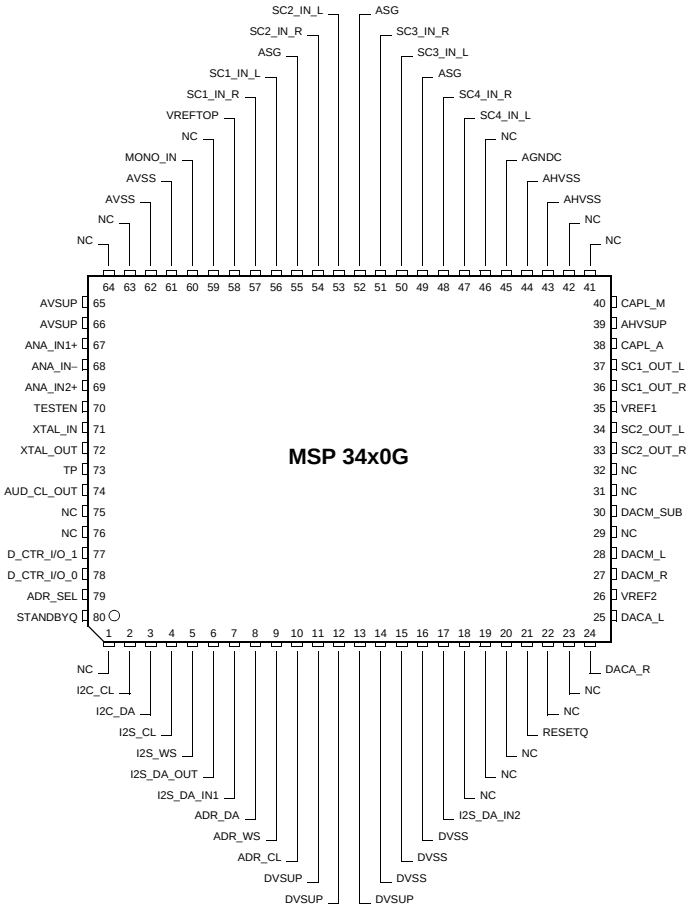

PQFP80 package

www.rtv-horvat-dj.hr

MSP3410G (IC301)

Absolute Maximum Ratings

Symbol	Parameter	Pin Name	Min.	Max.	Unit
T_A	Ambient Operating Temperature	–	0	70	°C
T_S	Storage Temperature	–	–40	125	°C
V_{SUP1}	First Supply Voltage	AHVSUP	–0.3	9.0	V
V_{SUP2}	Second Supply Voltage	DVSUP	–0.3	6.0	V
V_{SUP3}	Third Supply Voltage	AVSUP	–0.3	6.0	V
dV_{SUP23}	Voltage between AVSUP and DVSUP	AVSUP, DVSUP	–0.5	0.5	V
P_{TOT}	Power Dissipation PLCC68 PSDIP64 PSDIP52 PQFP80 PLQFP64	AHVSUP, DVSUP, AVSUP		 1200 1300 1200 1000 960	 mW mW mW mW mW
V_{Idig}	Input Voltage, all Digital Inputs		–0.3	V_{SUP2}+0.3	V
I_{Idig}	Input Current, all Digital Pins	–	–20	+20	mA[1)]
V_{Iana}	Input Voltage, all Analog Inputs	SCn_IN_s,[2)] MONO_IN	–0.3	V_{SUP1}+0.3	V
I_{Iana}	Input Current, all Analog Inputs	SCn_IN_s,[2)] MONO_IN	–5	+5	mA[1)]
I_{Oana}	Output Current, all SCART Outputs	SCn_OUT_s[2)]	[3), 4)]	[3), 4)]	
I_{Oana}	Output Current, all Analog Outputs except SCART Outputs	DACp_s[2)]	[3)]	[3)]	
I_{Cana}	Output Current, other pins connected to capacitors	CAPL_p,[2)] AGNDC	[3)]	[3)]	

[1)] positive value means current flowing into the circuit
[2)] “n” means “1”, “2”, “3”, or “4”, “s” means “L” or “R”, “p” means “M” or “A”
[3)] The analog outputs are short-circuit proof with respect to First Supply Voltage and ground.
[4)] Total chip power dissipation must not exceed absolute maximum rating.

Stresses beyond those listed in the “Absolute Maximum Ratings” may cause permanent damage to the device. This is a stress rating only. Functional operation of the device at these or any other conditions beyond those indicated in the “Recommended Operating Conditions/Characteristics” of this specification is not implied. Exposure to absolute maximum ratings conditions for extended periods may affect device reliability.

www.rtv-horvat-dj.hr

VCT3834 (IC1001)

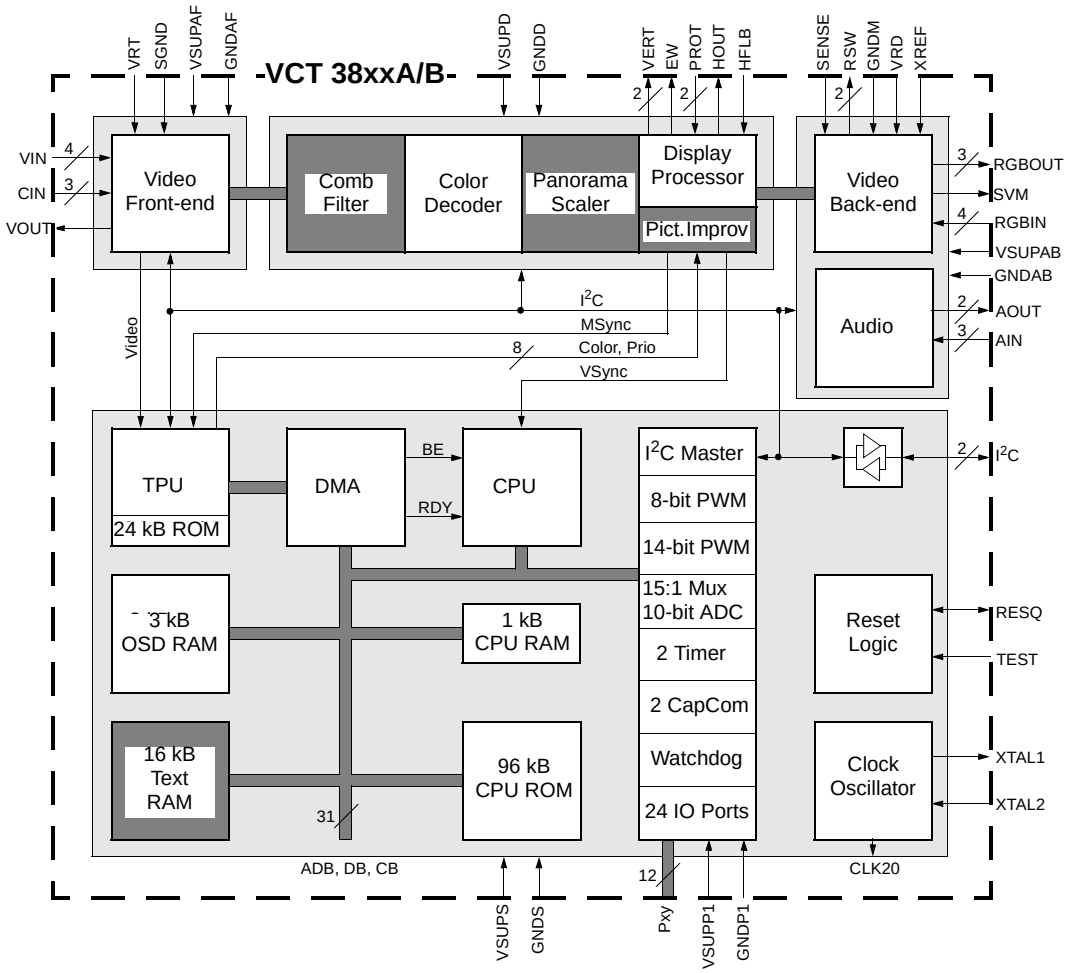

Block diagram of the VCT 38xxA/B (shaded blocks are optional)

The block diagram does not show the additional features of VCT 38xxB.

Absolute Maximum Ratings

Symbol	Parameter	Pin Name	Min.	Max.	Unit
T_A	Ambient Operating Temperature		–	65	°C
T_S	Storage Temperature		–40	125	°C
P_{TOT}	Total Power Dissipation		–	1400	mW
$VSUP_x$	Supply Voltage	$VSUP_x$	–0.3	6	V
V_I	Input Voltage, all Inputs		–0.3	$VSUP_x$+0.3[1)]	V
V_O	Output Voltage, all Outputs		–0.3	$VSUP_x$+0.3[1)]	V
V_{IO}	Input/Output Voltage, all Open Drain Outputs		–0.3	6	V

[1)] Refer to Pin Circuits (chapter 6.6. on page 157)

Stresses beyond those listed in the “Absolute Maximum Ratings” may cause permanent damage to the device. This is a stress rating only. Functional operation of the device at these or any other conditions beyond those indicated in the “Recommended Operating Conditions/Characteristics” of this specification is not implied. Exposure to absolute maximum ratings conditions for extended periods may affect device reliability.

www.rtv-horvat-dj.hr

VCT3834 (IC1001)

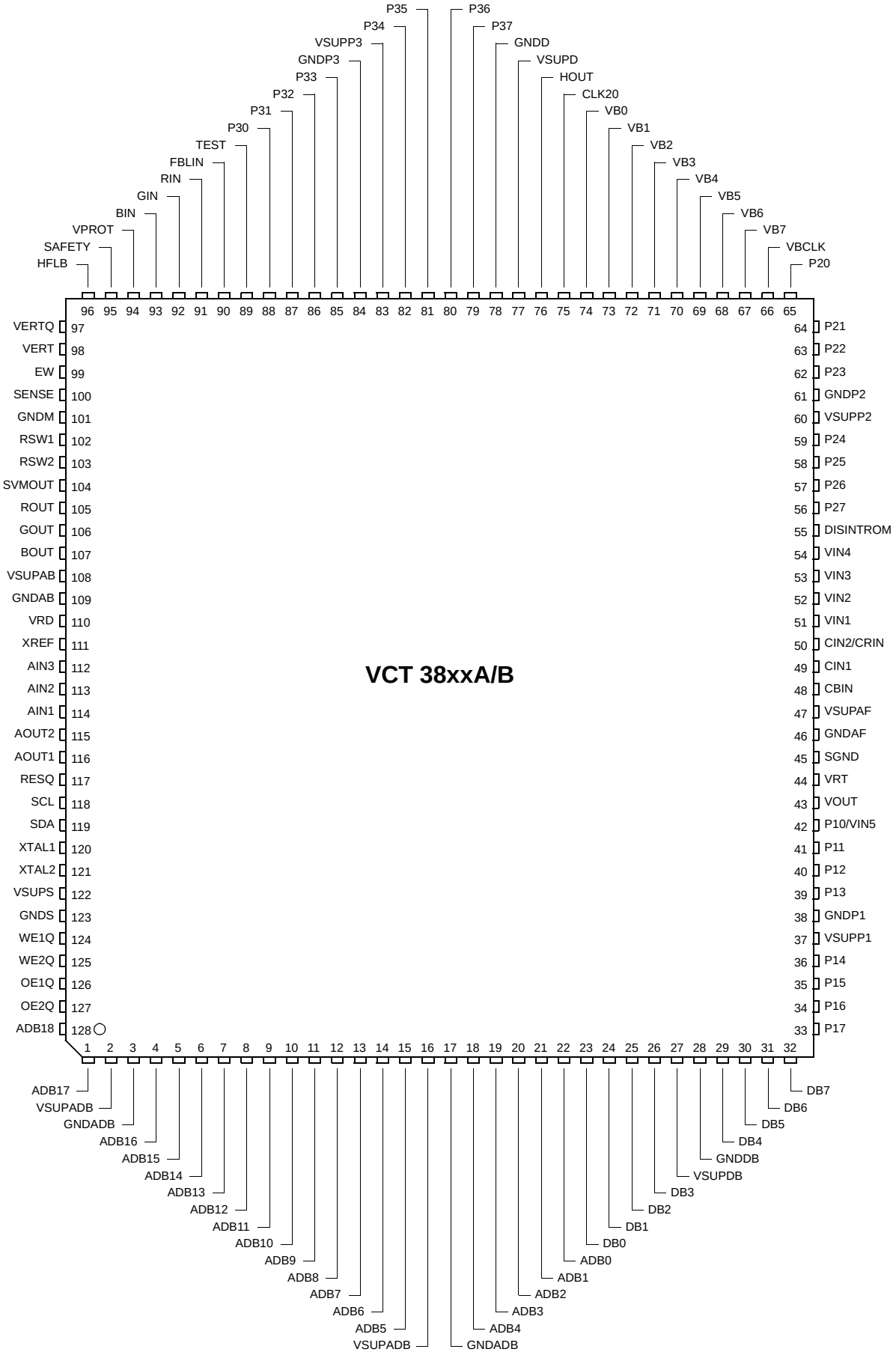

PMQFP128 package

www.rtv-horvat-dj.hr

STV9380 (IC502)

PIN CONNECTION

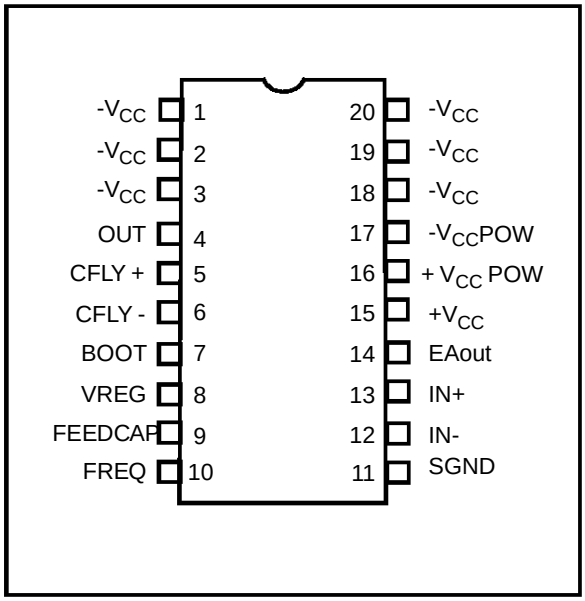

PIN FUNCTIONS

Pin Number	Name	Function
1	$-V_{CC}$	Negative supply
2	$-V_{CC}$	Negative supply
3	$-V_{CC}$	Negative supply
4	OUT	PWM Output
5	CFLY+	Flyback capacitor
6	CFLY-	Flyback capacitor
7	BOOT	Bootstrap capacitor
8	VREG	Internal voltage regulator
9	FEEDCAP	Feed-back integrating capacitor
10	FREQ	Frequency setting resistor
11	SGND	Signal Ground
12	IN-	Error amplifier inverting input
13	IN+	Error amplifier non-inverting input
14	EA out	Error amplifier output
15	$+V_{CC}$	Positive supply
16	$+V_{CC}$POW	Positive Power supply
17	-VccPOW	Negative Power supply
18	$-V_{CC}$	Negative supply
19	$-V_{CC}$	Negative supply
20	$-V_{CC}$	Negative supply

www.rtv-horvat-dj.hr

STV9380 (IC502)

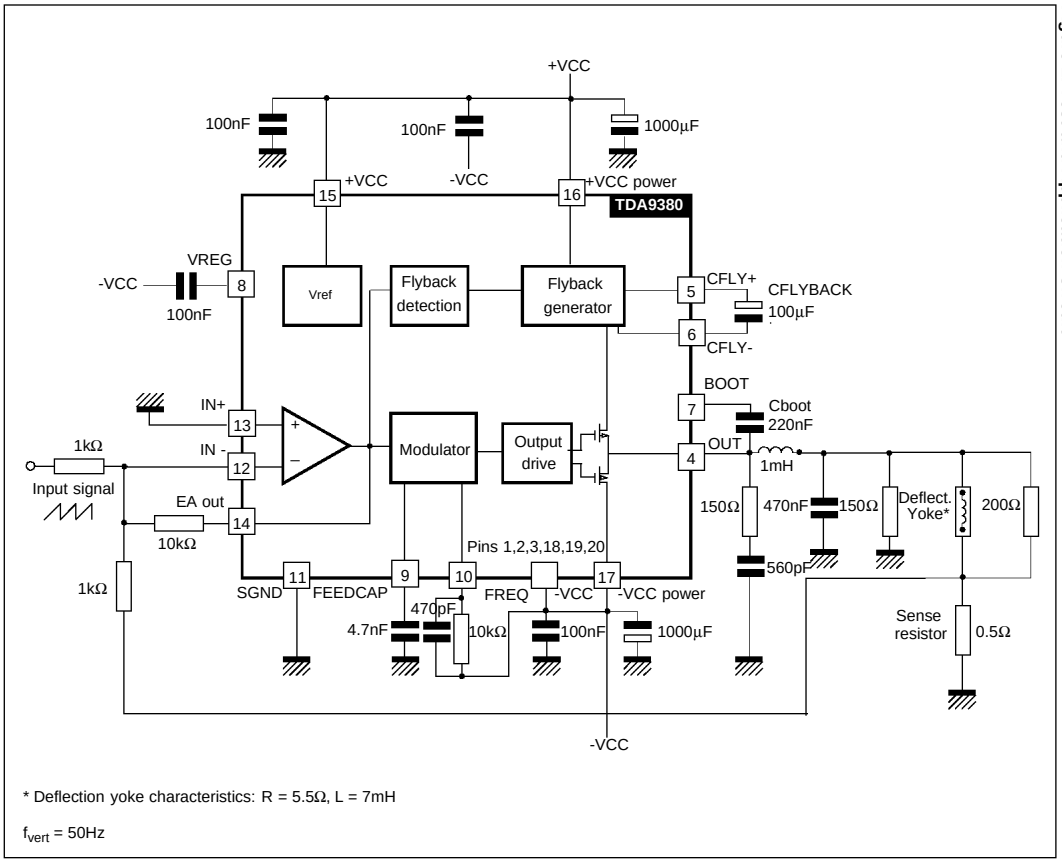

* Deflection yoke characteristics: R = 5.5Ω, L = 7mH

f_{vert} = 50Hz

Figure 1. Test and Application Circuit

ELECTRICAL CHARACTERISTICS (refer to Figure 1 on page 3)

Tamb = 25°C unless otherwise specified, Vcc = ±12V, f_{vert}=50Hz

Symbol	Parameter	Test Conditions	Min.	Typ.	Max.	Units
+Vcc	Positive supply range		+10		+18	V
-Vcc	Negative supply range		-18		-10	V
ΔVcc	Maximum recommended difference between +Vcc and |–Vcc|				±4	V
Vcc_{start}	Low Vcc detection			±6.5		V
Iq	Quiescent supply current	Input voltage = 0		14		mA
Iy	Maximum recommended vertical yoke current				±1.25	A
I_{13}, I_{12}	Amplifier Input bias current			-0.1		µA
V_{OS}	Output Offset voltage	Note 1	-50		+50	mV
SVR	Supply voltage rejection	Note 2		82		dB
Fly_{thr}	Flyback detection threshold (positive slope)	V(14)		1.5		V
Fly_{thf}	Flyback detection threshold (negative slope)	V(14)		0.5		V
Pd	Integrated circuit Dissipated power	Note 3		1.1		W
Fsw	Switching frequency	R_{freq} = 10kΩ	120	140	160	kHz
Fsw - op	Switching frequency operative range		100		200	kHz
R_{freq}	Frequency controller resistor range	Pin 10	7	10	14	kΩ

Note: 1 Input voltage = 0, measured after the filter (e.g. accross the 470 nF filter capacitor)

Note: 2 Supply rejection of the positive or negative power supply. Vcc ripple =1Vpp, f=100Hz, measured on the sense resistor.

Note: 3 Power dissipated in the circuit in the case of the application from Figure 1 and the current in the deflection yoke adjusted to 2.5App. The corresponding power dissipated in the vertical deflection yoke is 2.8W.

www.rtv-horvat-dj.hr

TEA1507 (IC701)

Block Diagram

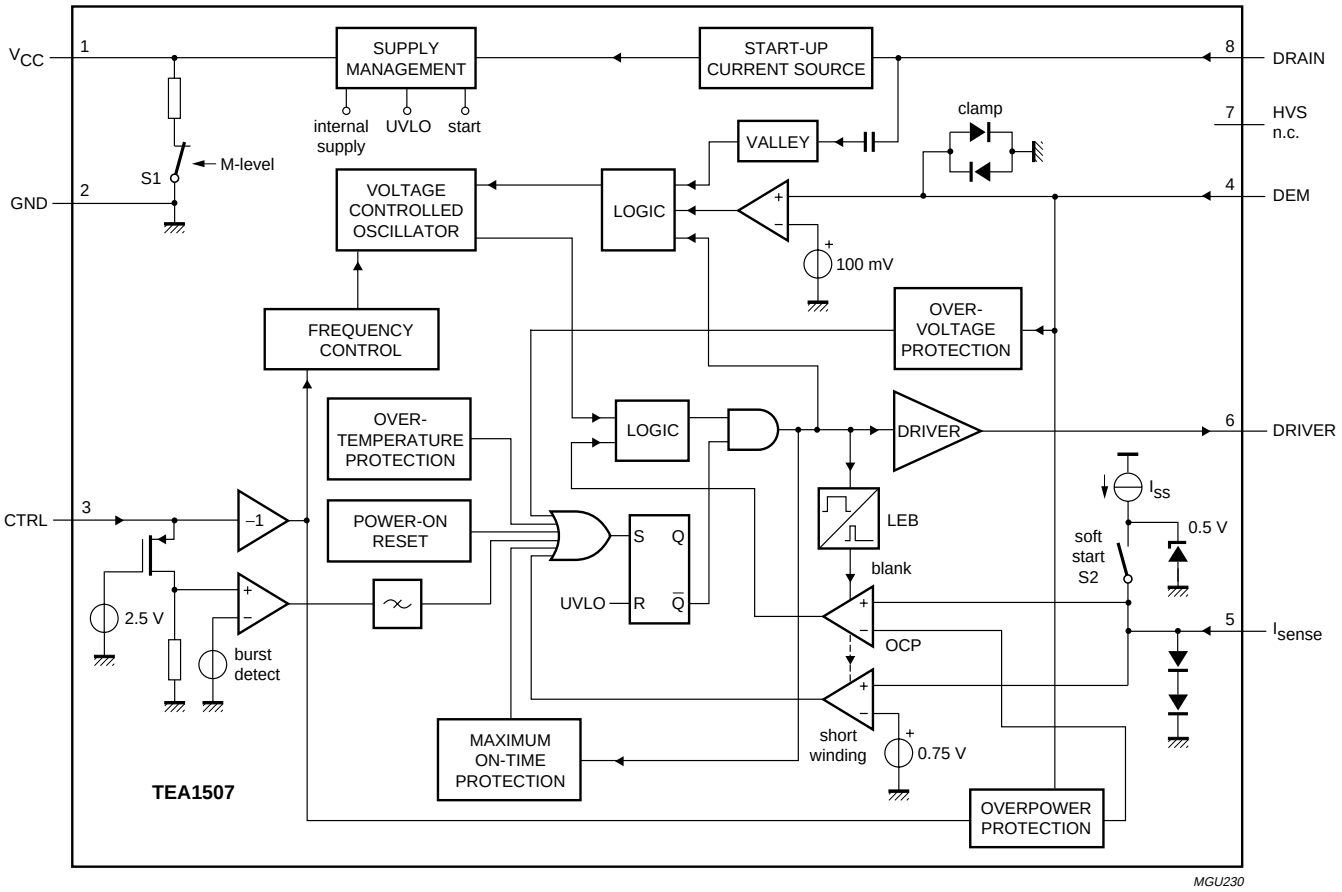

PINNING

SYMBOL	PIN	DESCRIPTION
V_{CC}	1	supply voltage
GND	2	ground
CTRL	3	control input
DEM	4	input from auxiliary winding for demagnetization timing, OVP and OPP
I_{sense}	5	programmable current sense input
DRIVER	6	gate driver output
HVS	7	high voltage safety spacer, not connected
DRAIN	8	drain of external MOS switch, input for start-up current and valley sensing

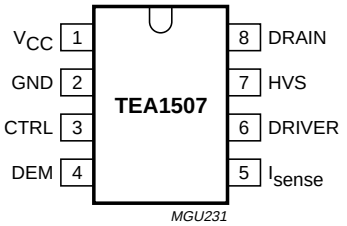

Fig.3 Pin configuration.

www.rtv-horvat-dj.hr

TEA1507 (IC701)

CHARACTERISTICS

T_{amb} = 25 °C; V_{CC} = 15 V; all voltages are measured with respect to ground (pin 2); currents are positive when flowing into the IC; unless otherwise specified.

SYMBOL	PARAMETER	CONDITIONS	MIN.	TYP.	MAX.	UNIT
Start-up current source (pin 8)						
$I_{i(DRAIN)}$	supply current drawn from drain pin	V_{CC} = 0 V; V_{DRAIN} > 100 V	1.0	1.2	1.4	mA
		with auxiliary supply; V_{DRAIN} > 100 V	–	100	300	µA
BV_{DSS}	breakdown voltage		650	–	–	V
M-level	mains-dependent operation-enabling level		60	–	100	V
V_{CC} management (pin 1)						
$V_{CC(start)}$	start-up voltage on V_{CC}		10.3	11	11.7	V
$V_{CC(UVLO)}$	under voltage lock-out on V_{CC}		8.1	8.7	9.3	V
$V_{CC(hys)}$	hysteresis voltage on V_{CC}	$V_{CC(start)} - V_{CC(UVLO)}$	2.0	2.3	2.6	V
$I_{i(VCC)H}$	pin V_{CC} charging current	V_{DRAIN} > 100 V; V_{CC} < 3V	–1.2	–1	–0.8	mA
$I_{i(VCC)L}$	pin V_{CC} charging current	V_{DRAIN} > 100 V; 3 V < V_{CC} < $V_{CC(UVLO)}$	–1.2	–0.75	–0.45	mA
$I_{VCC(restart)}$	pin V_{CC} restart current	V_{DRAIN} > 100 V; $V_{CC(UVLO)}$ < V_{CC} < $V_{CC(start)}$	–650	–550	–450	µA
$I_{CC(operate)}$	supply current under normal operation	no load on pin DRIVER	1.1	1.3	1.5	mA
Demagnetization management (pin 4)						
V_{DEM}	demagnetization comparator threshold voltage on pin DEM		50	100	150	mV
I_{DEM}	pin DEM current	V_{DEM} = 50 mV	–50[1]	–	0	nA
$V_{clamp(DEM)(neg)}$	negative clamp voltage on pin DEM	at I_{DEM} = –150 µA	–0.5	–0.25	–0.05	V
$V_{clamp(DEM)(pos)}$	positive clamp voltage on pin DEM	at I_{DEM} = 250 µA	0.5	0.7	0.9	V
t_{suppr}	suppression of transformer ringing at start of secondary stroke		1.1	1.5	1.9	µs
Pulse width modulator						
$t_{on(min)}$	minimum on-time		–	t_{leb}	–	ns
$t_{on(max)}$	maximum on-time	latched	40	50	60	µs
Oscillator						
f_{oscL}	oscillator low frequency (fixed frequency)	V_{CTRL} > 1.5 V	5	6.5	8	kHz
f_{oscH}	oscillator high frequency (fixed frequency)	V_{CTRL} < 1 V	145	175	205	kHz
$V_{vco(start)}$	peak voltage at pin I_{sense}, where frequency reduction starts	see Fig.6	–	75	–	mV
$V_{vco(max)}$	peak voltage at pin I_{sense}, where the frequency is equal to f_{oscL}		–	50	–	mV
Duty cycle control (pin 3)						
$V_{CTRL(min)}$	min. voltage on CTRL (max. duty cycle)		–	1.0	–	V
$V_{CTRL(max)}$	max. voltage on CTRL (min. duty cycle)		–	1.5	–	V

www.rtv-horvat-dj.hr

TEA1507 (IC701)

SYMBOL	PARAMETER	CONDITIONS	MIN.	TYP.	MAX.	UNIT
Burst mode standby (pin 3)						
$V_{th(burst)(on)}$	burst mode standby active threshold voltage	at I_{burst} = 6 mA	3.3	3.8	4.3	V
$I_{th(burst)(on)}$	burst mode standby active current		16	–	–	mA
$I_{th(burst)(off)}$	burst mode standby inactive current		–	–	6	mA
$t_{(burst-blank)}$	burst mode standby blanking time		25	30	35	µs
Valley switch (pin 8)						
$\Delta V/\Delta t_{valley}$	$\Delta V/\Delta t$ for valley recognition		–85	–	+85	V/µs
$t_{valley-swon}$	delay from valley recognition to switch-on		–	150[1]	–	ns
Current and short winding protection (pin 5)						
$V_{sense(max)}$	maximum source voltage OCP	$\Delta V/\Delta t$ = 0.1 V/µs	0.48	0.52	0.56	V
$t_{propagation}$	delay from detecting $V_{sense(max)}$ to switch-off	$\Delta V/\Delta t$ = 0.5 V/µs	–	140	185	ns
V_{swp}	short winding protection voltage		0.83	0.88	0.96	V
t_{leb}	blanking time for current and short winding protection		300	370	440	ns
I_{ss}	soft start current	V_{sense} < 0.5 V	45	60	75	µA
Overvoltage protection (pin 4)						
$I_{(OVP)(DEM)}$	OVP protection level at pin 4, set by the demagnetization resistor R_{DEM}; see Section “OverVoltage Protection (OVP)”		54	60	66	µA
Overpower protection (pin 4)						
$I_{(OPP)(DEM)}$	OPP current at pin 4, start of OPP correction. Set by the demagnetization resistor R_{DEM}; see Section “OverPower Protection (OPP)”		–	–24	–	µA
$I_{(OPP50\%)(DEM)}$	OPP current at pin 4 where maximum source voltage is limited to 0.3 V		–	–100	–	µA
Driver (pin 6)						
I_{source}	source current capability of driver	V_{CC} = 9.5 V; V_{DRIVER} = 2 V	–	–170	–88	mA
I_{sink}	sink current capability of driver	V_{CC}= 9.5 V; V_{DRIVER} = 2 V	–	300	–	mA
		V_{CC} = 9.5 V; V_{DRIVER} = 9.5 V	400	700	–	mA
$V_{o(driver)(max)}$	maximum output voltage of the driver	V_{CC} > 12 V	–	11.5	12	V
Temperature protection						
$T_{prot(max)}$	maximum temperature threshold		130	140	150	°C
$T_{prot(hyst)}$	hysteresis temperature		–	8[1]	–	°C

Note

1. Guaranteed by design.

www.rtv-horvat-dj.hr

CHASSIS LAYOUT

PWB A (Mother Unit, FB217N1).

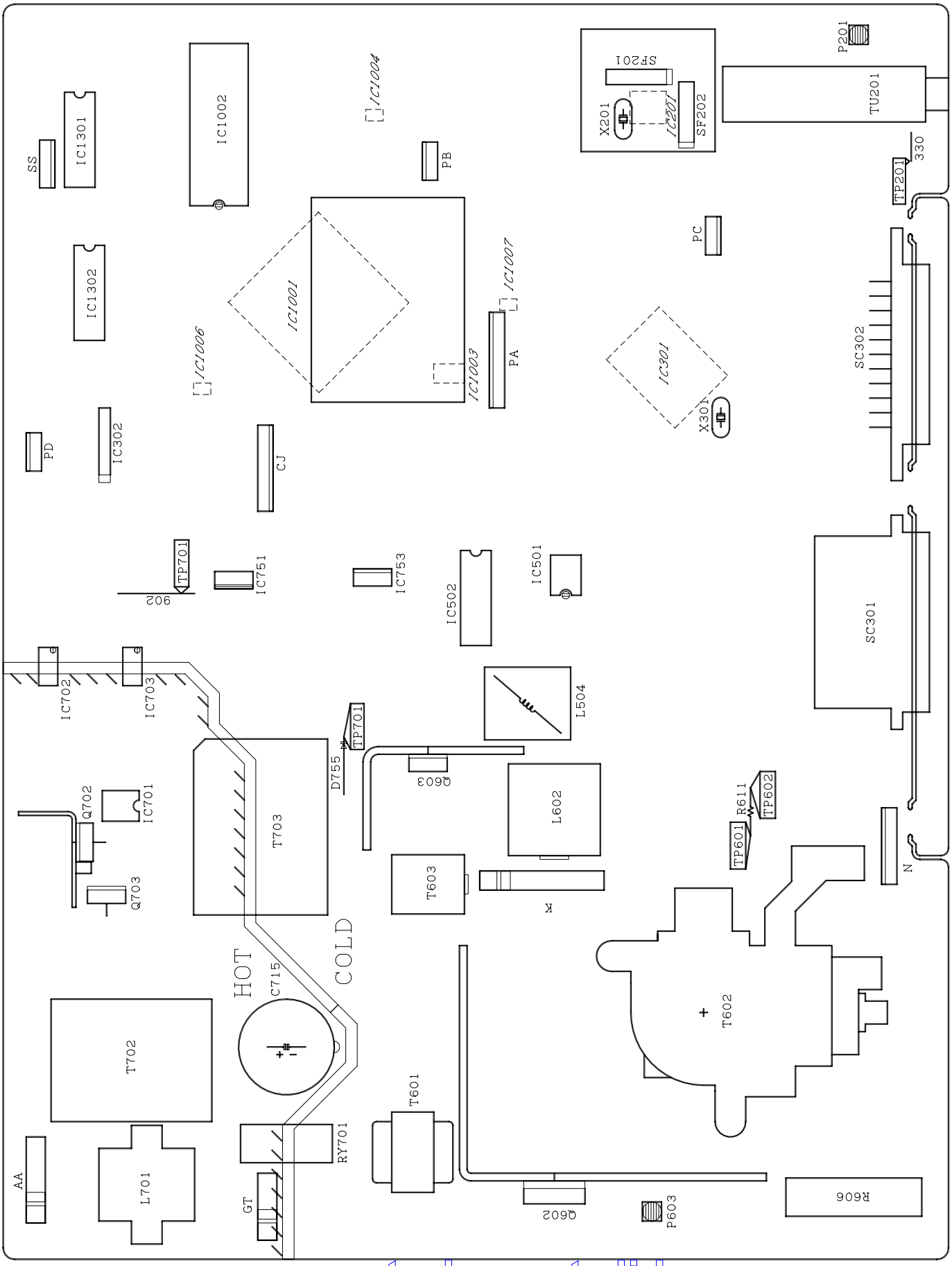

www.rtv-horvat-dj.hr

PWB B CHASSIS LAYOUT (CRT SOCKET UNIT, FB218N1).

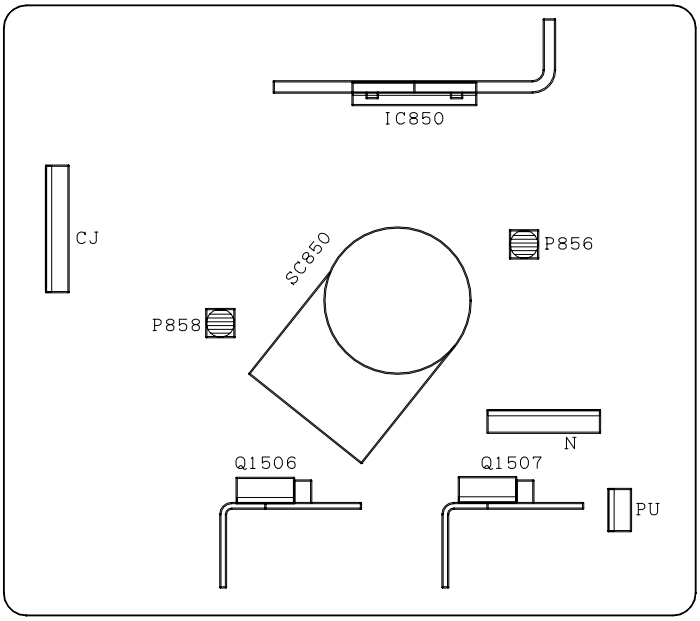

PWB C CHASSIS LAYOUT (FRONTAL POWER-CONTROL UNIT, FB219N1).

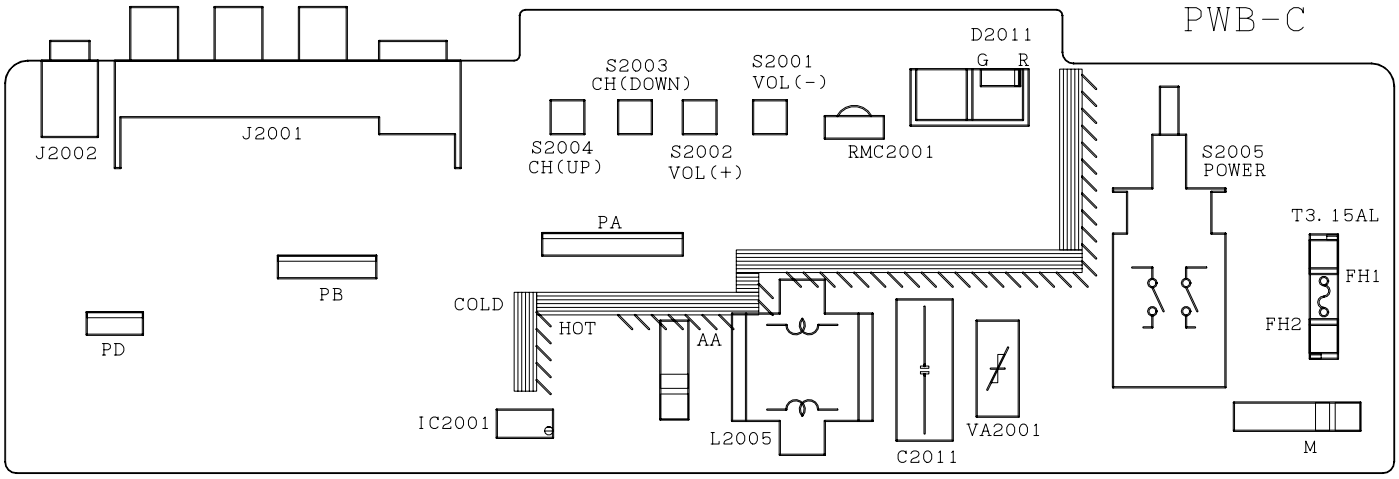

www.rtv-horvat-dj.hr

IMPORTANT SERVICING NOTES

Only qualified service personnel are allowed to carry out maintenance and repair of this receiver.

Servicing of High Voltage System and CRT

It is important that the static charge is removed from the high voltage system when carrying out work on the receiver. This can be achieved by connecting a 10K resistor (with a suitably insulated lead) from the CRT cavity connector to the CRT ground tag. This must be carried out with the AC supply disconnected from the receiver.

Note the following:

- The CRT in this receiver employs Integral Implosion Protection.
- If the CRT has to be changed it MUST be replaced with the correct type for continued safe working.
- DO NOT lift the CRT by its neck.
- When handing the CRT, ensure that shatterproof goggles are worn.
- Ensure that the CRT is discharge before handling.

X-Ray

This receiver is designed to keep any x-ray emission to an absolute minimum. Some fault conditions and servicing procedures may produce potentially hazardous x-ray radiation levels. This is a problem when in close proximity to the receiver for long periods of time. To reduce any risks associated with this, please observe the following precautions:

1. When undertaking any servicing on this chassis, DO NOT increase the EHT to more than 32.0 KV, (at a instantaneous beam current of 1500μA).

2. Ensure that during normal operation the EHT does not exceed 29.5KV±1.5KV (at a beam current of 1650μA). This level has been preset in the factory. Always check that this level has not been exceeded after carrying out any repair on the receiver.

3. DO NOT replace the CRT with any other type than that specified in the parts listing as this may cause excessive x-ray radiation.

Before returning the receiver to the customer

In addition to the above checks, the following should also be carried out before returning the receiver to the customer.

1. Inspect all the leads to ensure that they are dressed correctly and that they are not obstructed or pinched by any other parts.

2. Ensure that all protective devices are in good condition. These will include nonmetallic control knobs, insulating fish papers, cabinets backs, compartment covers or shields, mechanical insulators, etc.

www.rtv-horvat-dj.hr

CONTROLS & TERMINALS

■ FRONT TV

1. Main power button
2. Power indicator
3. Remote control sensor
4. Volume DOWN button
5. Volume UP button
6. Channel DOWN button
7. Channel UP button
8. Door

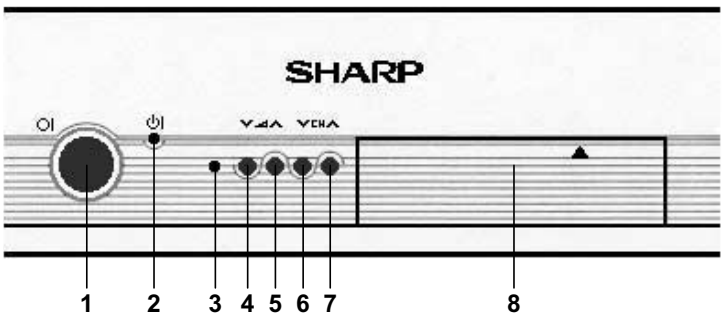

HOW TO OPEN THE DOOR

Press the top of the door, opening it slightly hook your finger inside and pull open.

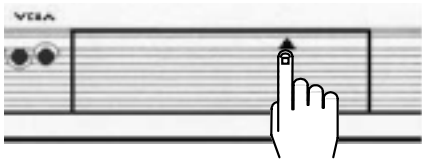

Behind the door

1. S-VIDEO input terminal
2. VIDEO input terminal (PAL/SECAM/NTSC)
3. AUDIO input terminal (left)
4. AUDIO input terminal (right)
5. Headphone jack (3.5mm / 16~600 ohms)

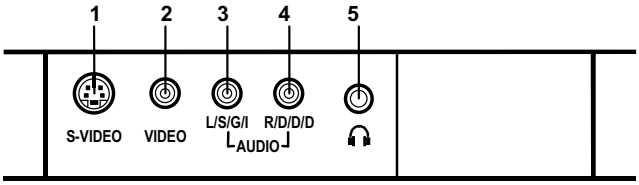

■ REAR TV

21-pin In/Out

1. 21-pin Audio/Video (AV-2)
   With PAL/SECAM/NTSC Video Input
2. 21-pin Audio/Video (AV-1)
   With PAL/SECAM/NTSC/S-Video Input
3. 21-pin Euro SCART (RGB)
   With PAL/SECAM/NTSC Video Input

RF Input

4. Aerial terminal

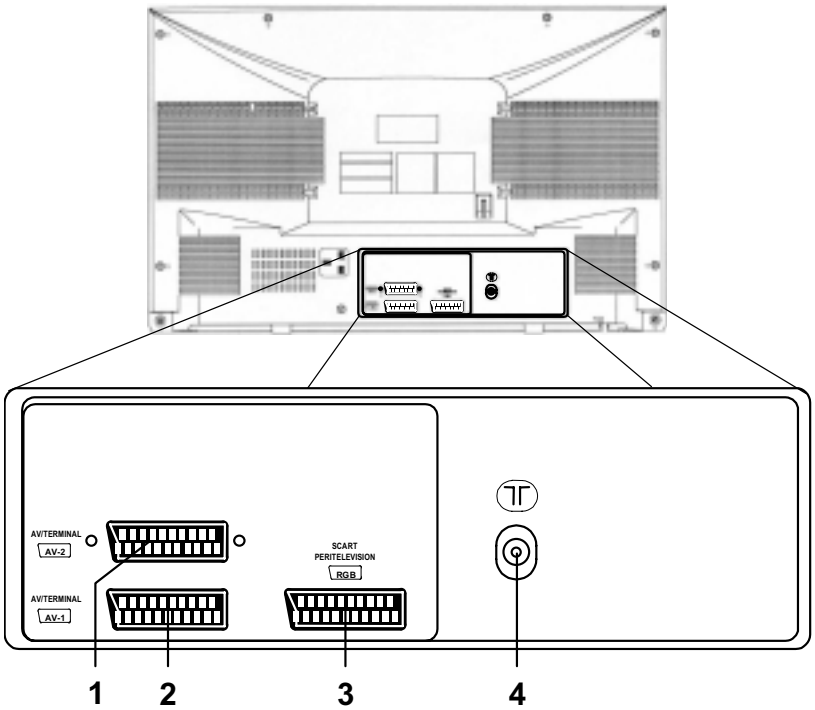

www.rtv-horvat-dj.hr

REMOTE CONTROL

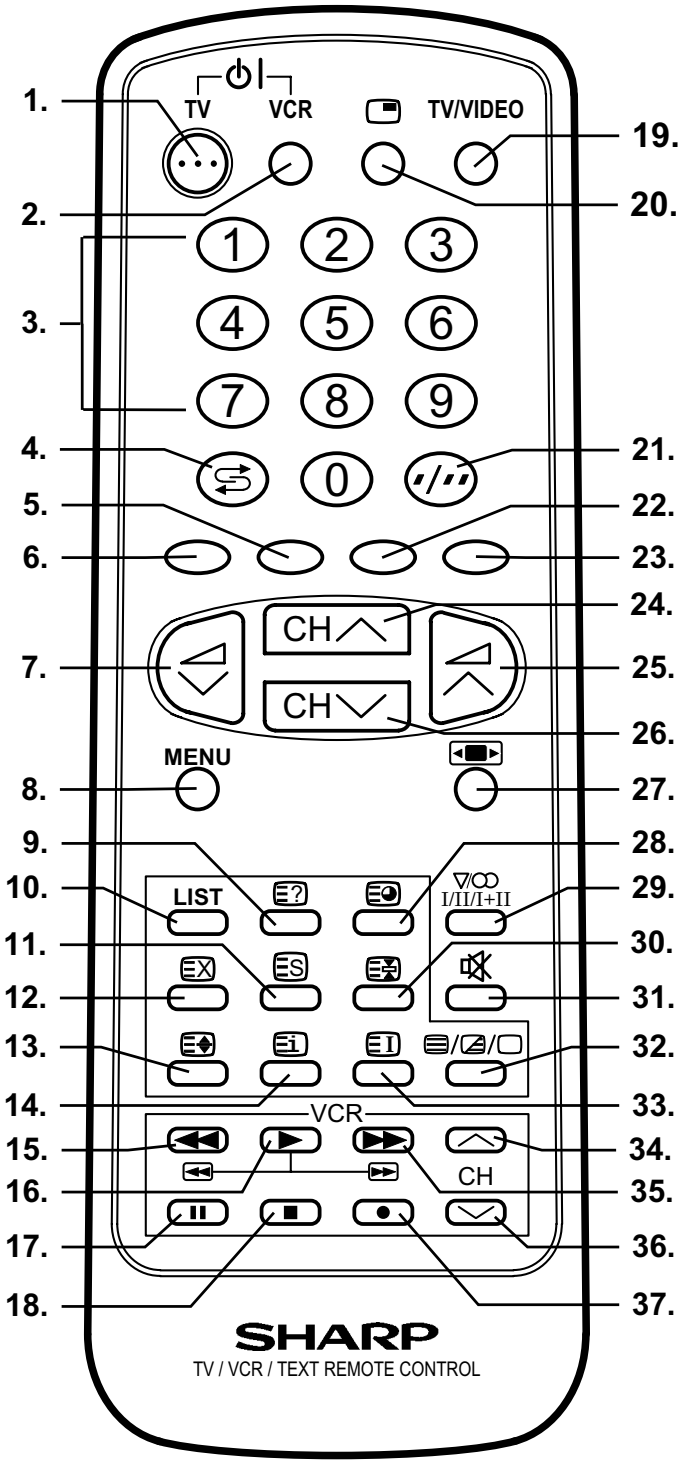

TV	**1.**	Stand-by ON/OFF switch (TV)
Video	**2.**	Power ON / OFF switch (VCR)
TV	**3.**	Digit buttons 0 ~ 9
	4.	Flashback button
Teletext	**5.**	Colour button (green)
	6.	Colour button (red)
TV	**7.**	Volume DOWN/Cursor control LEFT
	8.	Menu button
Teletext	**9.**	Reveal button
	10.	List selector
	11.	Store button
	12.	Cancel button
	13.	Half page button
	14.	Cursor button
TV	**14.**	Sub-titles button
Video	**15.**	Rewind/picture search/reverse
	16.	Play button
	17.	Pause / Still button
	18.	Stop button
TV	**19.**	TV / VIDEO selector
	20.	Call button
	21.	Single/Double entry
Teletext	**22.**	Colour button (yellow)
	23.	Colour button (cyan)
TV	**24.**	Channel UP/Cursor control UP
	25.	Volume UP/Cursor control RIGHT
	26.	Channel DOWN/Cursor control DOWN
	27.	Wide Mode selector
TV /Teletext	**28.**	Time button
TV	**29.**	Sound mode selector
Teletext	**30.**	Hold button
TV	**31.**	Sound Mute button
Teletext	**32.**	Text/Mix/Picture button
	33.	Index button
Video	**34.**	Channel Up selector
	35.	Fast forward/picture search/forward
	36.	Channel Down selector
	37.	Record button

www.rtv-horvat-dj.hr

SCHEMATIC DIAGRAM OF CRT UNIT (FB218N1)

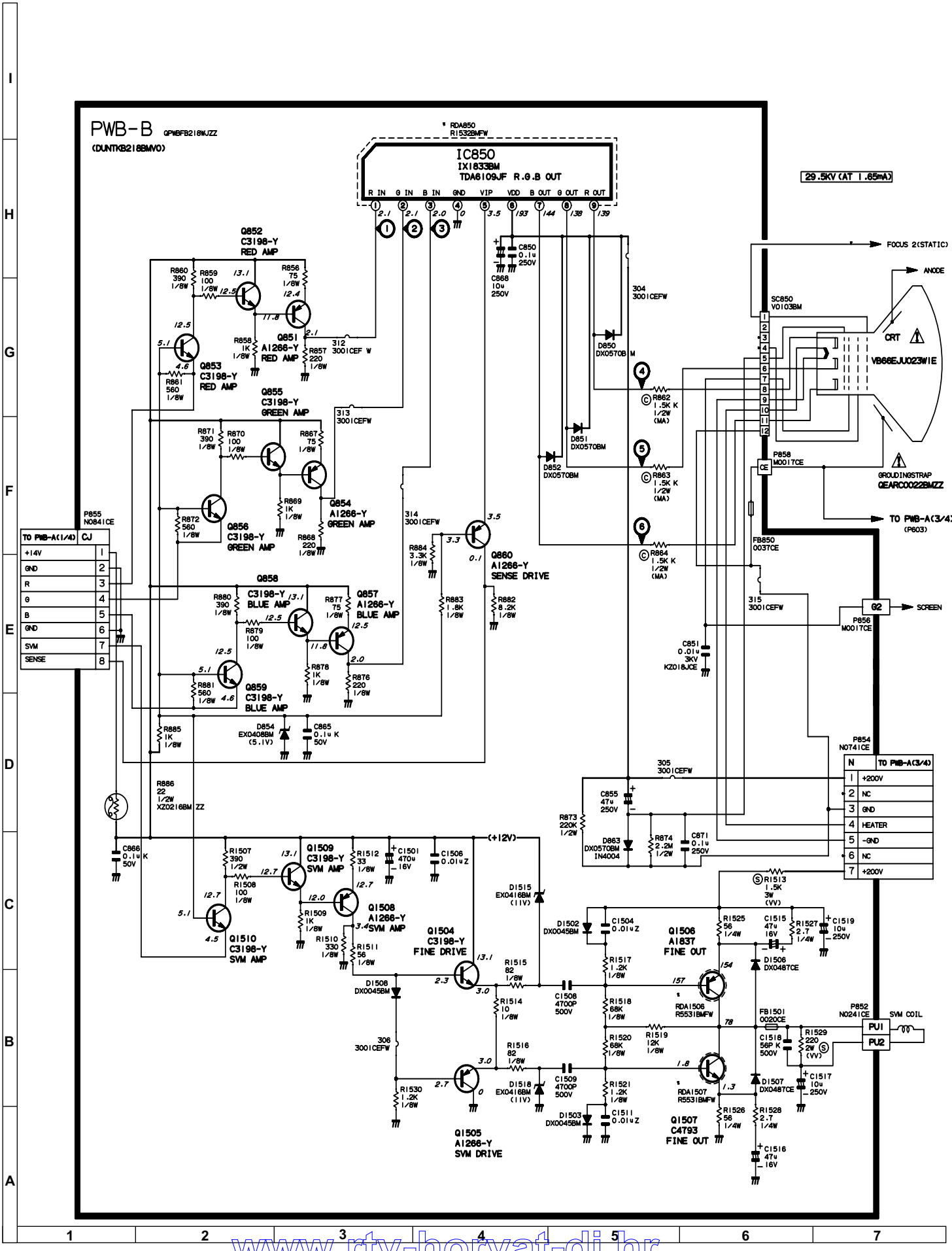

www.rtv-horvat-dj.hr

SCHEMATIC DIAGRAM OF MAIN 1 (FB217N1)

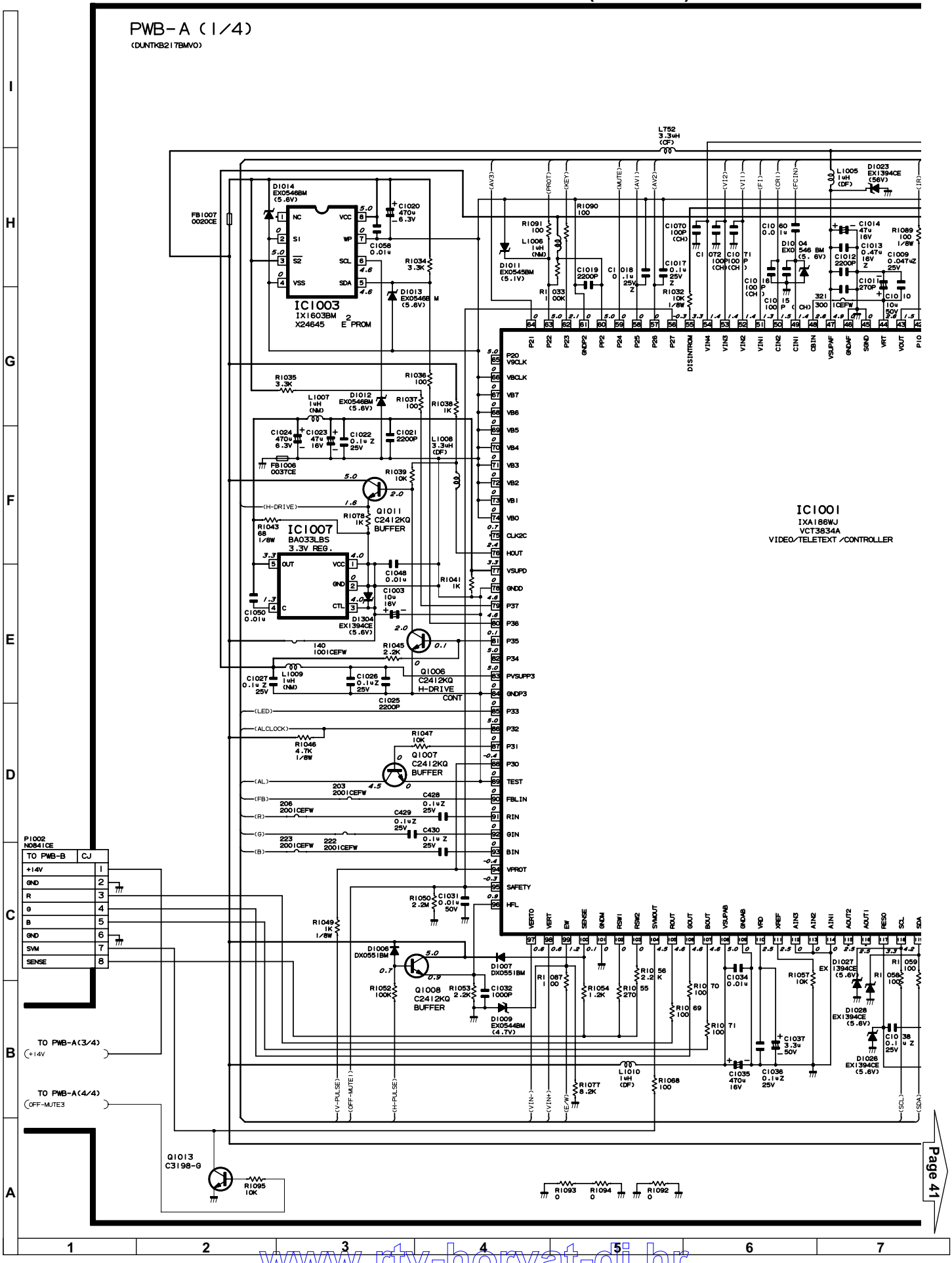

www.rtv-horvat-dj.hr

SCHEMATIC DIAGRAM OF MAIN 1 (FB217N1)

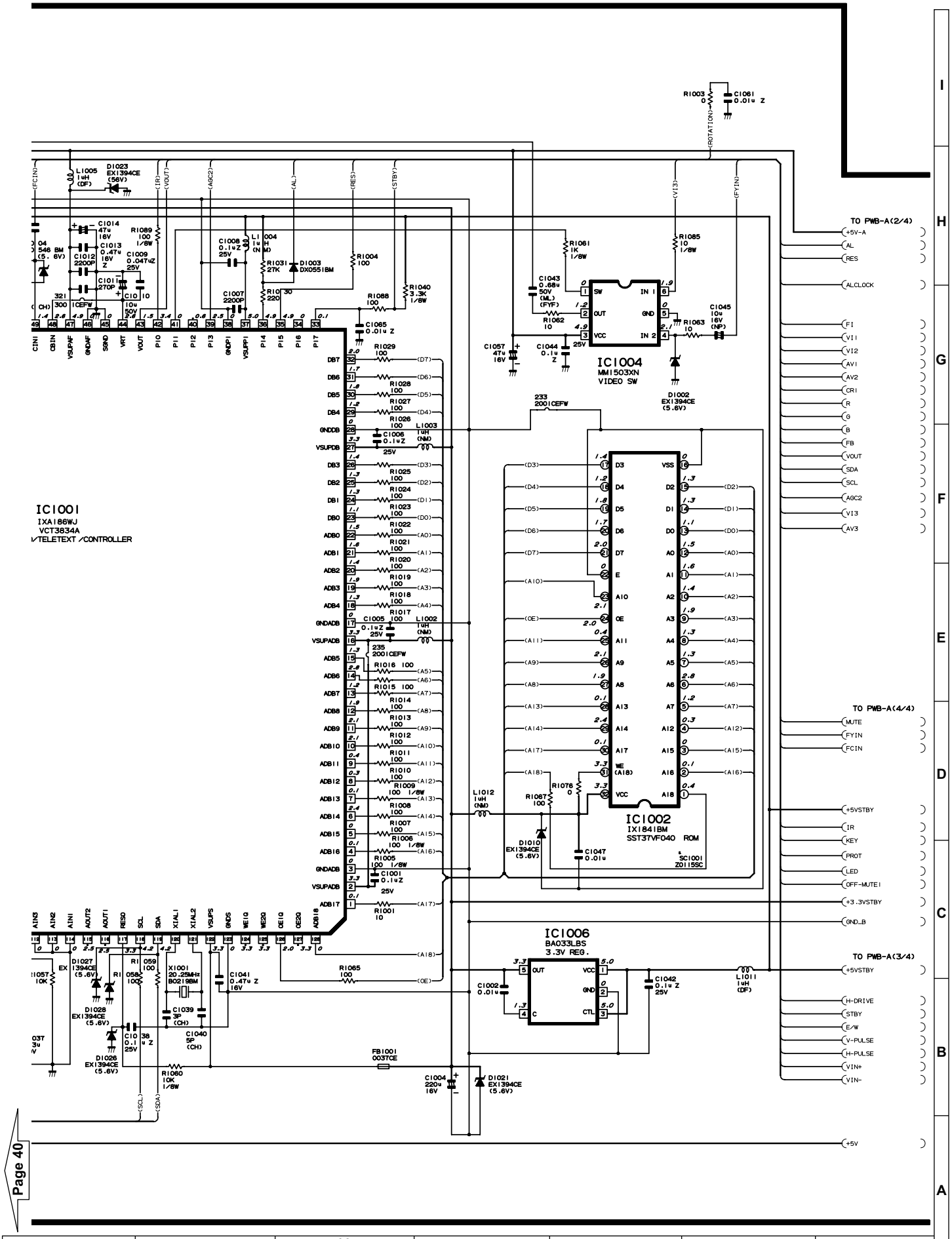

www.rtv-horvat-dj.hr

SCHEMATIC DIAGRAM OF MAIN 3 (FB217N1)

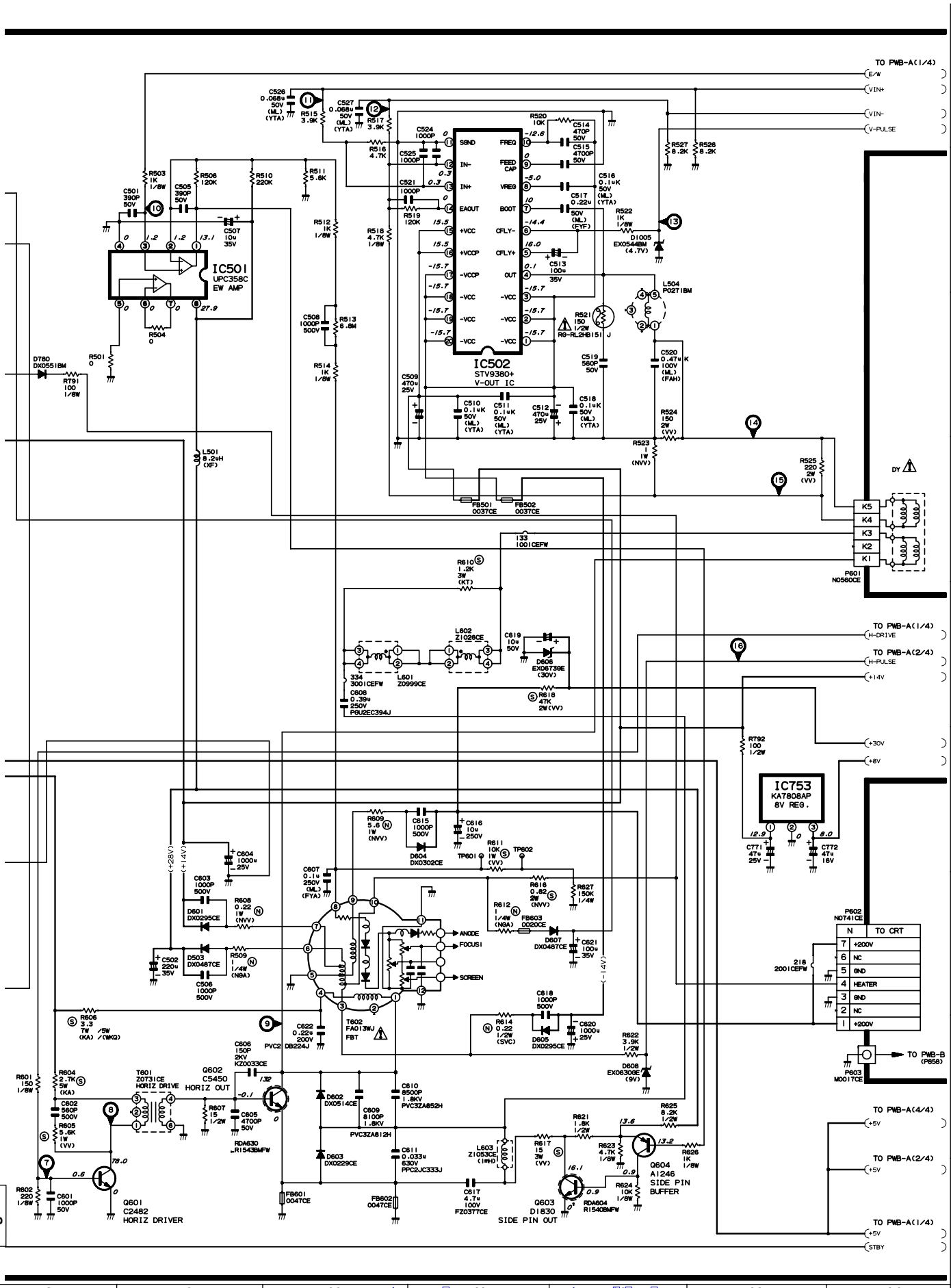

www.rtv-horvat-dj.hr

SCHEMATIC DIAGRAM OF MAIN 4 (FB217N1)

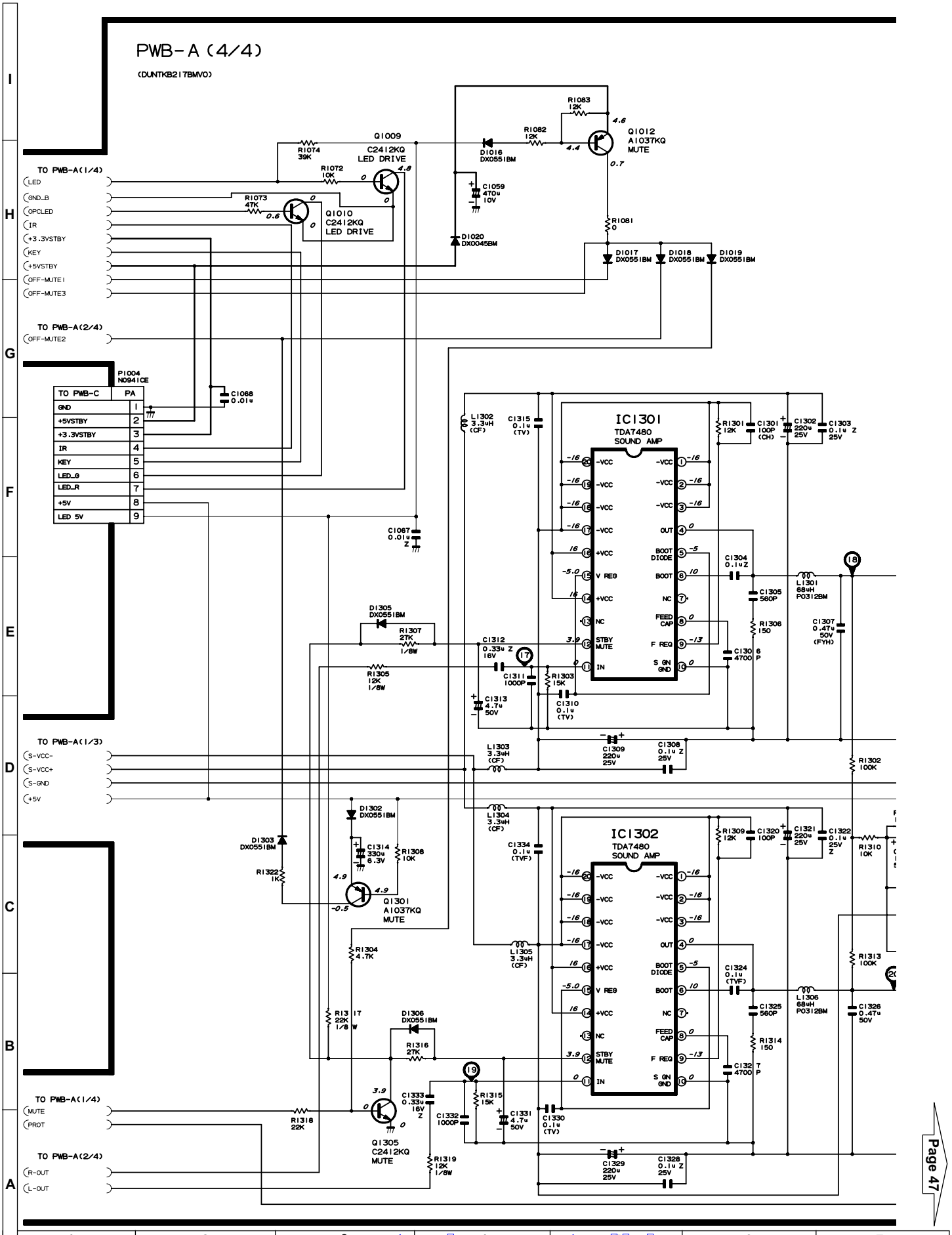

www.rtv-horvat-dj.hr

SCHEMATIC DIAGRAM OF MAIN 4 (FB217N1)

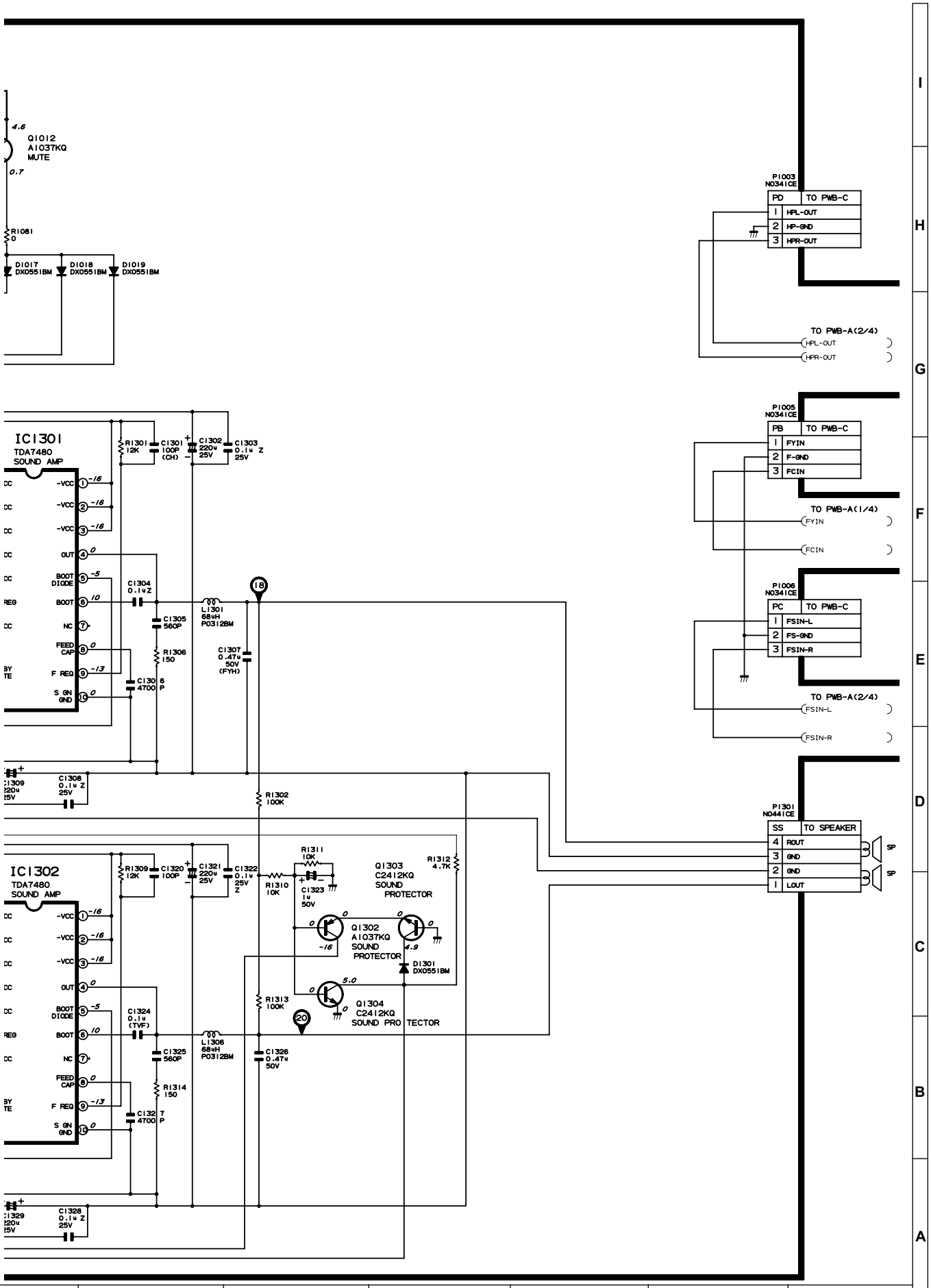

Page 46

www.rtv-horvat-dj.hr

SCHEMATIC DIAGRAM OF CONTROL UNIT (FB219N1)

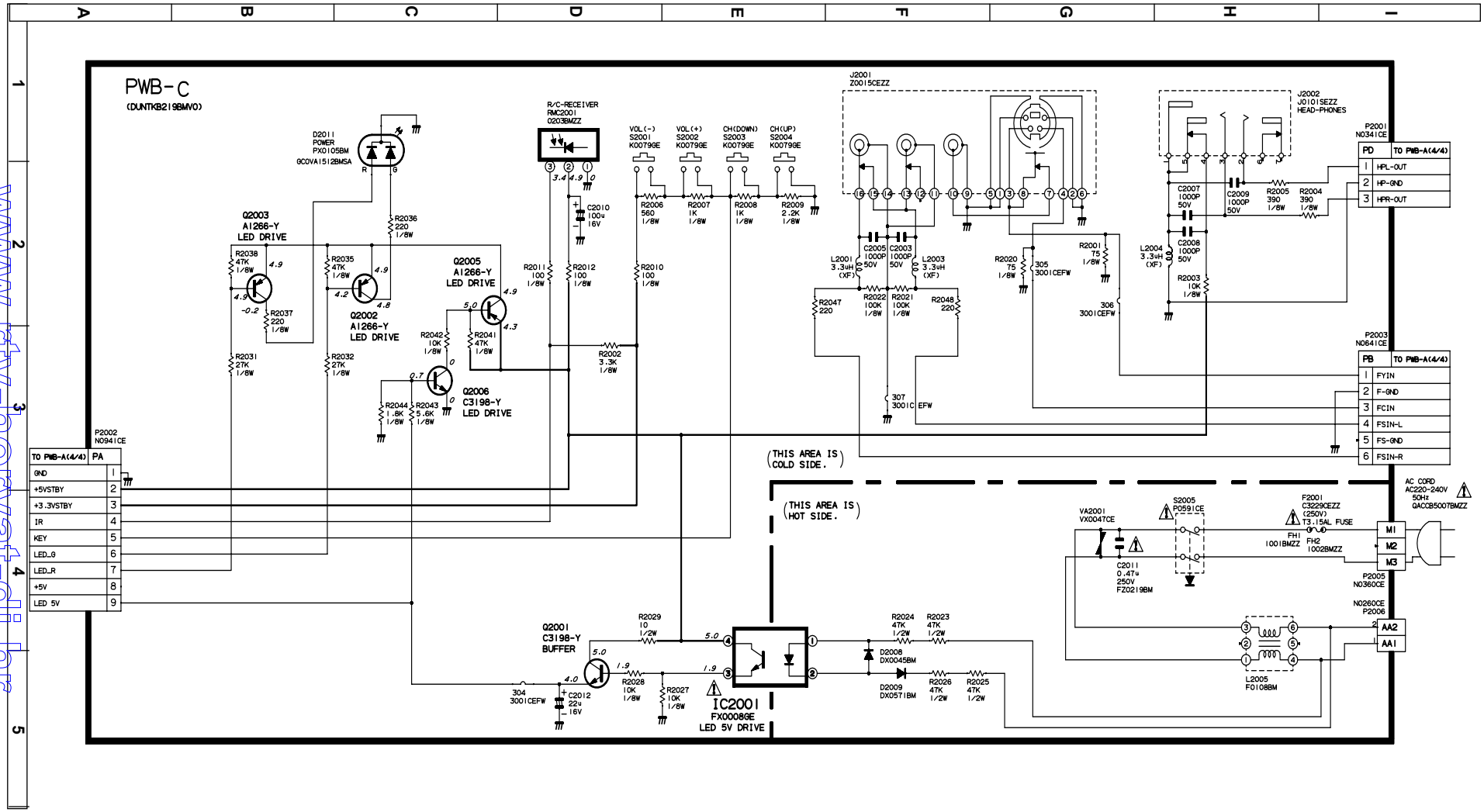

www.rtv-norvat-dj.hu

ELECTRICAL SPECIFICATIONS

•Power Input ..... 220V-240 Volts AC 50Hz

•Power Consumption
Normal Operation (Method IEC60107) 80W
Stand-by Operation 3W

•Audio Power Output Rating (MPO) / Impedance
Internal Left Speaker 10W, 7Ω
Internal Right Speaker 10W, 7Ω

•Speakers
Left / Right ..... 12 x 6cm

•Convergence (Maximum Misconvergence)
Static (Centre) between any two colours ... 0.08 cm
Dynamic after static equals zero
Within 10cm (4”) circle 0.12cm
10-25cm (4-10”) circle ..... 0.20 cm
Everywhere else ..... 0.28 cm

•Focus ..... High Bi-Potential Electrostatic

•Sweep Deflection ..... Magnetic

•Picture Intermediate frequency..... 38.9MHz

•Sound Carrier Trap..... 32.9MHz

•Adjacent Sound Carrier Trap 40.9MHz

•Adjacent Picture Carrier Trap..... 30.9MHz
.

•Aerial Input Impedance
VHF/UHF ..... 75 ohm Unbalanced

•Tuning Ranges..... 45.75 MHz thru 855.25 MHz
VHF: IR A - J / S1 - S41 CH (Hiperband)
UHF: I21 - I69 CH
CATV Special Channels

•White Level
Set brightness control to get total picture tube cathode current of 600 μA under no signal condition.
Maximum necessary correction of each picture tube cathode current to get 8900 degrees K-20 MPCD screen temperature should not exceed 15% of its original value.

X=0.290 ± 0.015 Y=0.284 ± 0.015

Specifications are subject to change without prior notice.

WARNING

The chassis in this receiver is partially hot. Use an isolation transformer between the line cord plug and power receptacle, when servicing this chassis.
To prevent electric shock, do not remove cover. No user-serviceable parts inside. Refer servicing to qualified service personnel.

www.rtv-horvat-dj.hr

PACKING OF THE SET & ACCESSORIES

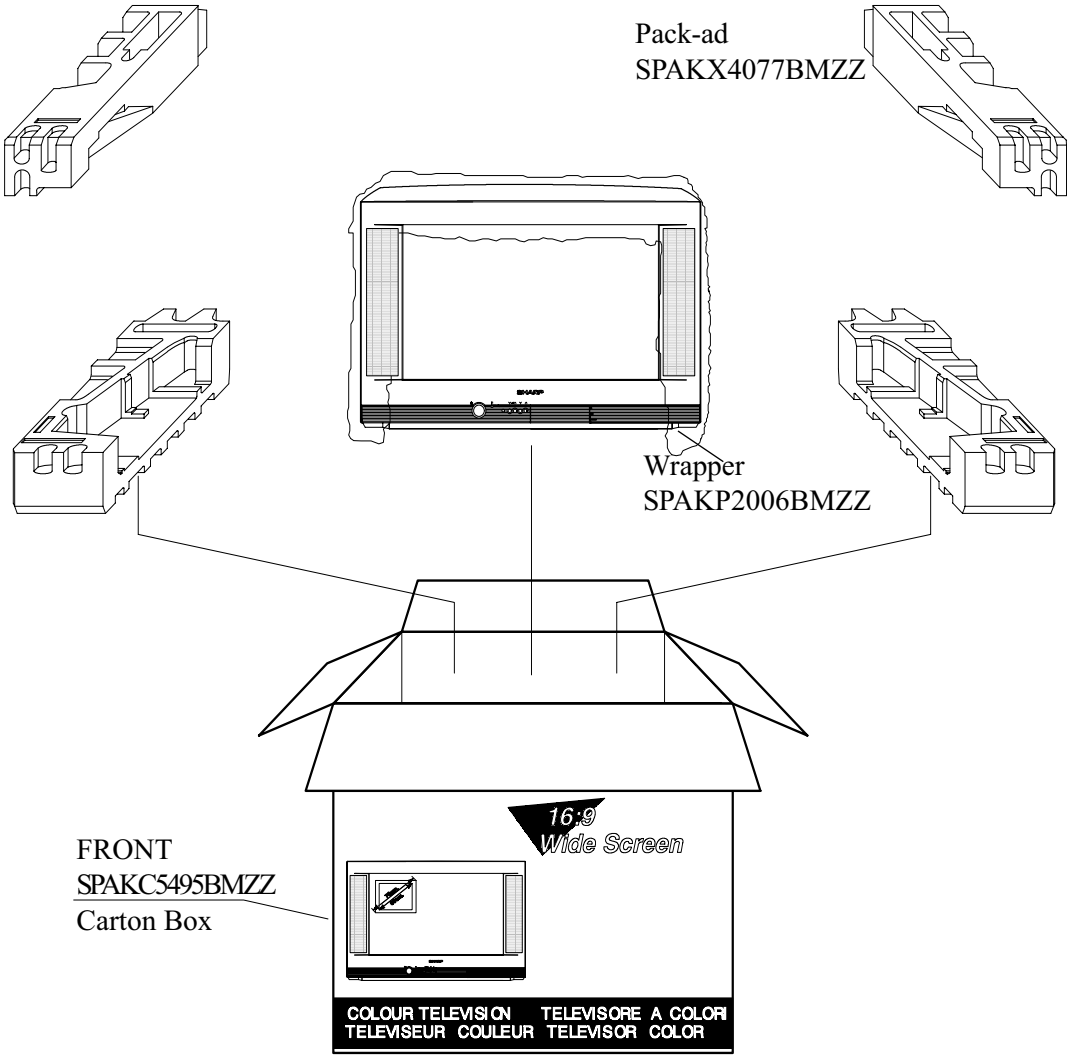

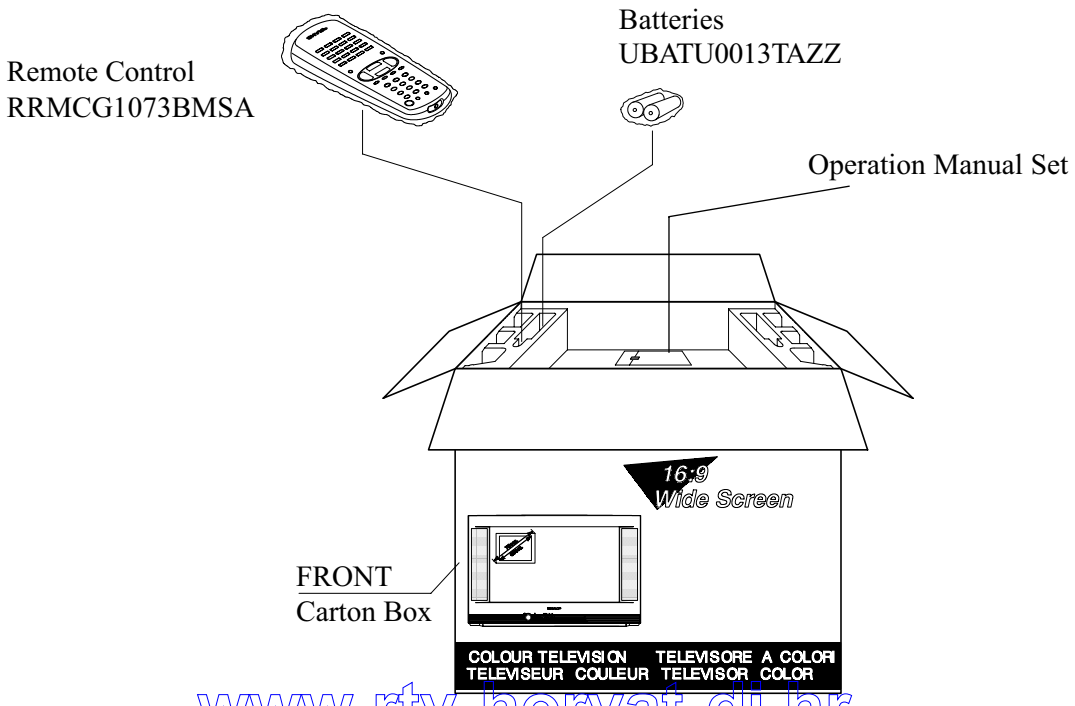

www.rtv-horvat-dj.hr

SOURCE OF DOCUMENTATION

1. TDA 9885, Philips Data Sheet:
TDA9885; TDA9886. I²C-bus controlled single/multistandard alignment-fee IF-PLL. Product specification. 2002 Mar 05.
http://www.semiconductors.philips.com/acrobat/datasheets/TDA9885_TDA9886_1.pdf

2. TDA 7480, ST Microelectronics Data Sheet:
TDA7480. 10W Mono Class D Amplifier. September 1998
http://us.st.com/stonline/books/pdf/docs/4839.pdf

3. MSP3410G, Micronas Data Sheet
Preliminary data sheet: "MSP 34x0G Multistandard Sound Processor Family with Virtual Dolby Surround", Edition March 5, 2001 (6251-476-4PD). Preliminary data sheet.
http://www.micronas.com/products/documentation/consumer/msp34x0g/index.php

4. VCT 3834, Micronas Data Sheet
Preliminary data sheet: "VCT 38xxA Video/Controller/Teletext IC Family", Edition Jan. 8, 2002 (6251-518-1PD).
http://www.micronas.com/products/documentation/consumer/vct38xxab/downloads/vct38xxab_1pd.pdf

5. STV 9380, ST Preliminary Data Sheet.
Class-D Vertical Deflection Amplifier for TV and Monitor Application.
Version 3.0. July 2001.
http://us.st.com/stonline/books/pdf/docs/7132.pdf

6. TEA 1507, Philips Data Sheet.
GreenChip™// SMPS control IC. Preliminary specification. Edition 2000 Dec 05.
http://www.semiconductors.philips.com/acrobat/datasheets/TEA1507_1.pdf

www.rtv-horvat-dj.hr

SCHEMATIC DIAGRAM OF MAIN 2 (FB217N1)

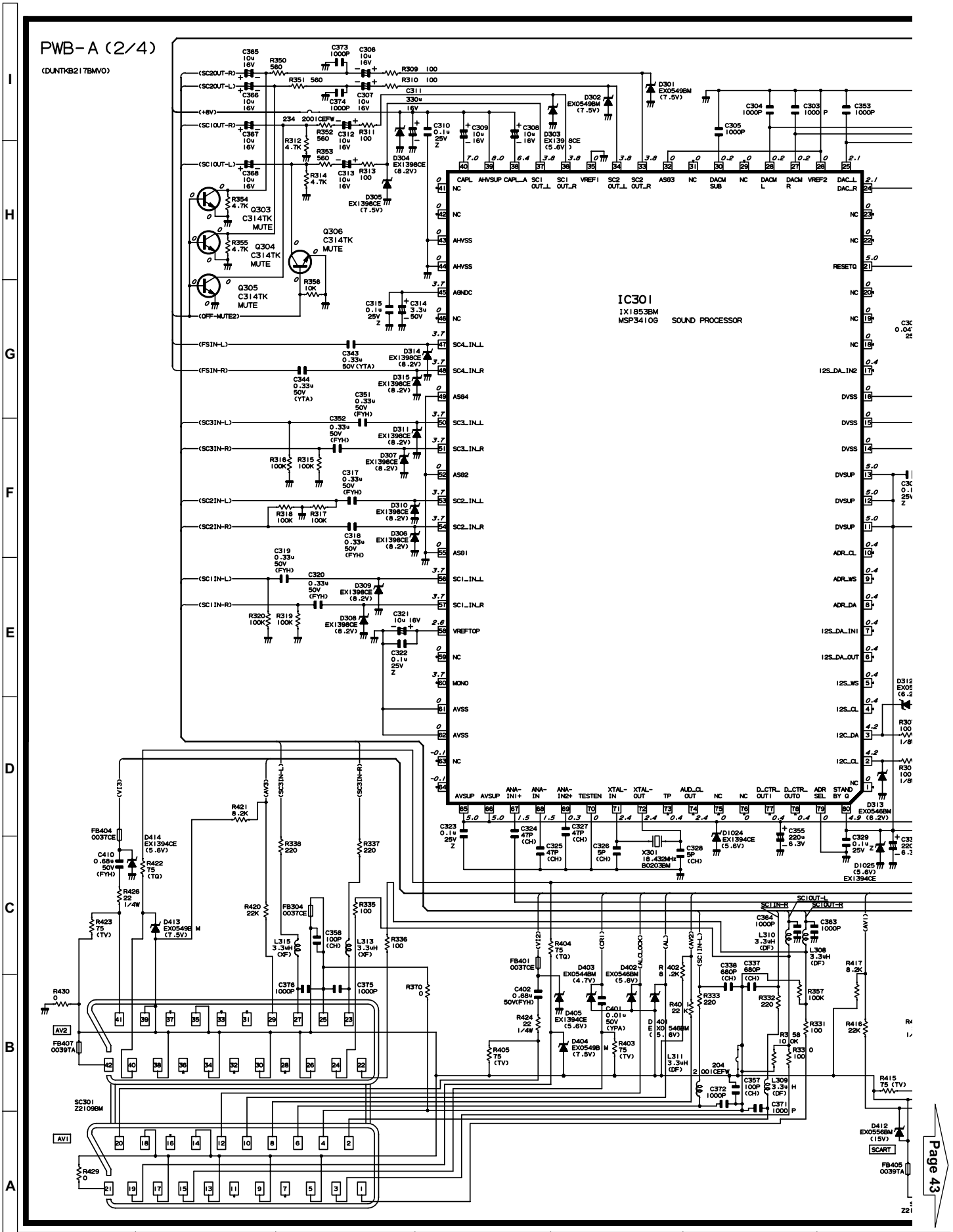

www.rtv-horvat-dj.hr

SCHEMATIC DIAGRAM OF MAIN 2 (FB217N1)

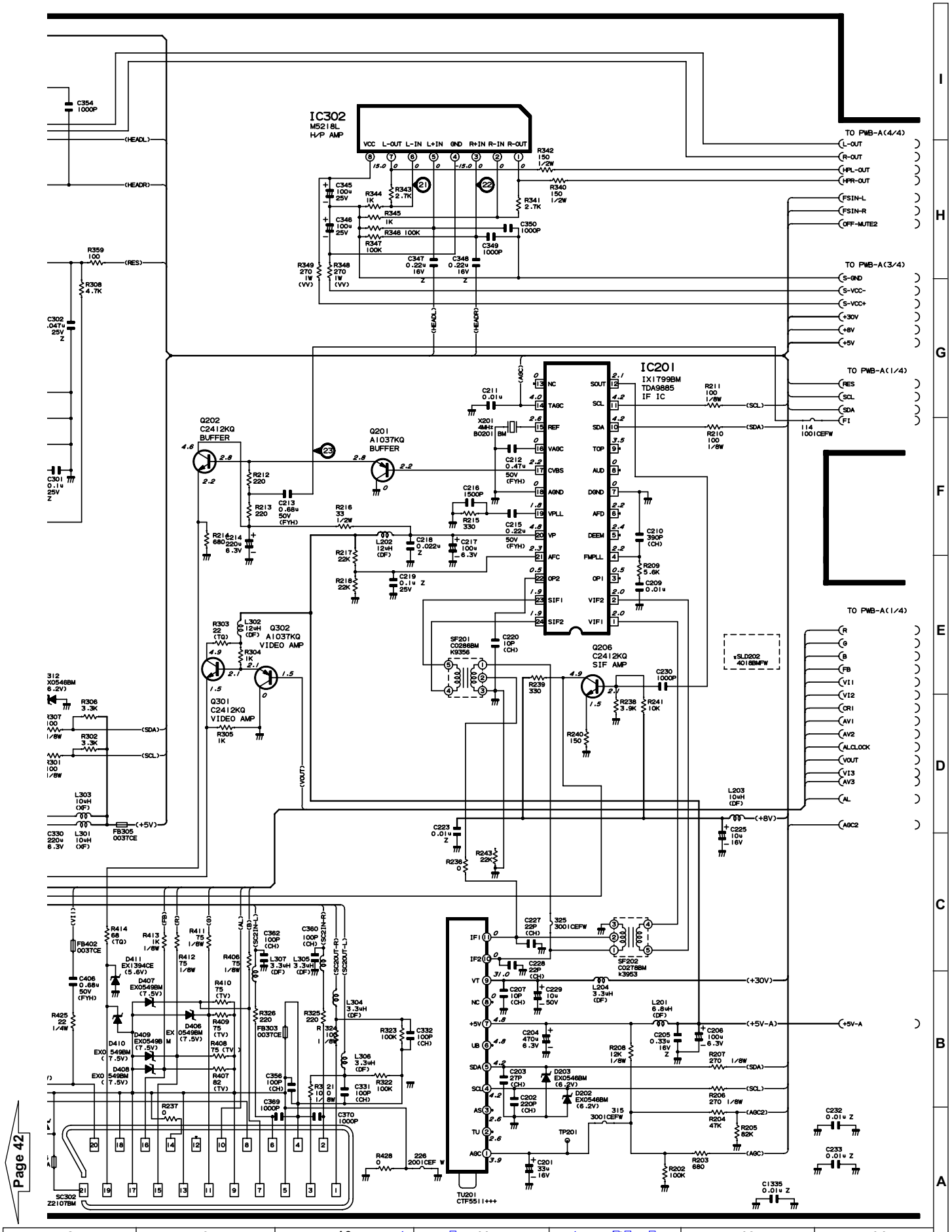

www.rtv-horvat-dj.hr

SCHEMATIC DIAGRAM OF MAIN 3 (FB217N1)

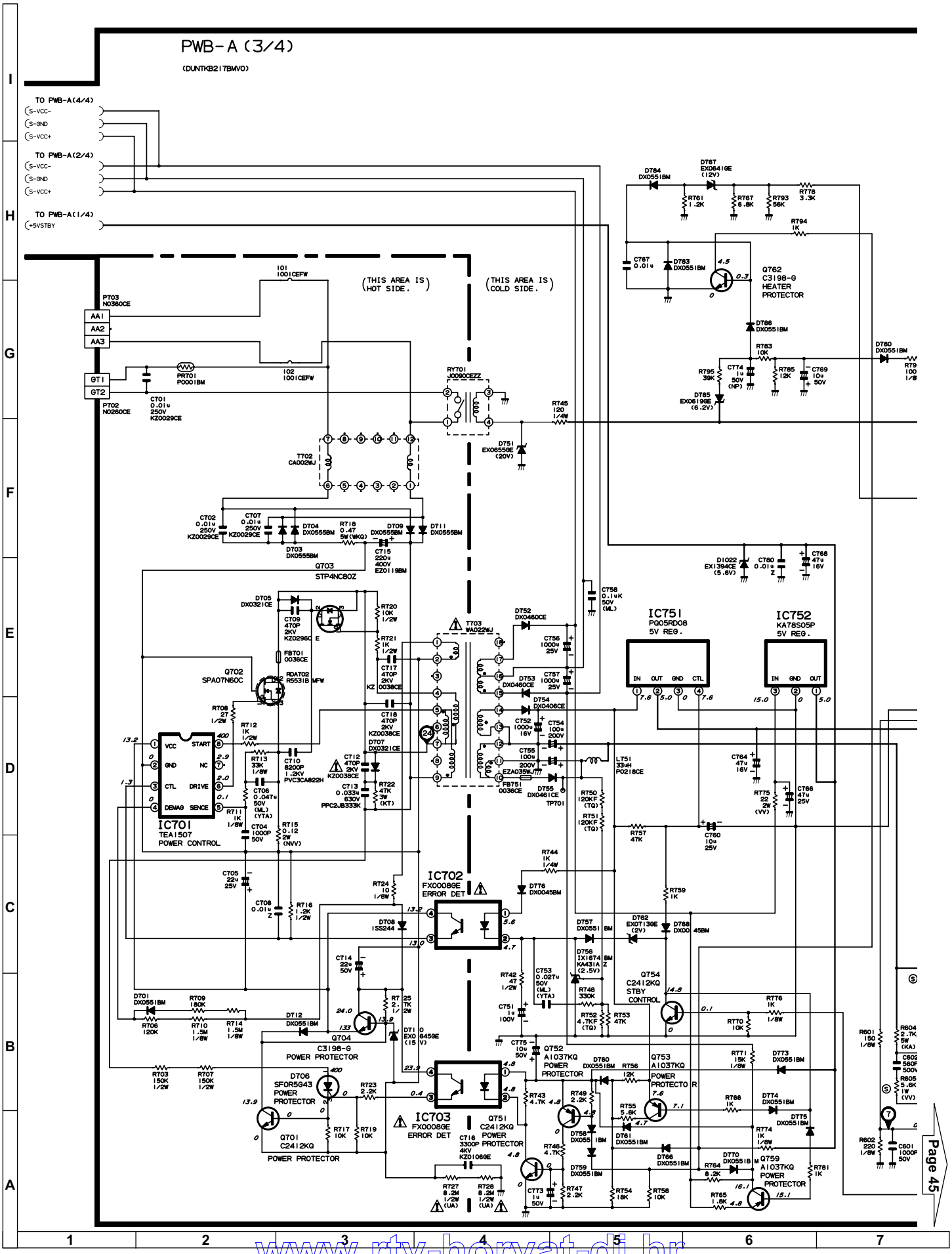

www.rtv-horvat-dj.hr

DESCRIPTION OF SCHEMATIC DIAGRAMS

SAFETY NOTE:
1. DISCONNECT THE AC PLUG FROM THE AC OUTLET BEFORE REPLACING PARTS.

2. SEMICONDUCTOR HEAT SINKS SHOULD BE REGARDED AS POTENTIAL SHOCK HAZARDS WHEN THE CHASSIS IS OPERATING.

NOTE:
1. The unit of resistance « ohm »is omitted (K=1000 ohms. M= Megaohm).
2. All resistors are 1/8 watt. unless otherwise noted.
3. All capacitors are µF, unless otherwise noted (P= µµF).

IMPORTANT SAFETY NOTE:

PARTS MARKED WITH « ⚠ » ( ) ARE IMPORTANT FOR MAINTAINING THE SAFETY OF THE SET. BE SURE TO REPLACE THESE PARTS WITH SPECIFIED ONES FOR MAINTAINING THE SAFETY AND PERFORMANCE OF THE SET.

SERVICE PRECAUTION:

THE AREA ENCLOSED BY THIS LINE (–•–•–) IS DIRECTLY CONNECTED WITH AC MAINS VOLTAGE. WHEN SERVICING THE AREA, CONNECT AN ISOLATING TRANSFORMER BETWEEN TV RECEIVER AND AC LINE TO ELIMINATE HAZARD OF ELECTRIC SHOCK.

CAUTION
This circuit diagram is original one, therefore there may be slight difference from yours.

Waveform Measurement Condition:

1. Test Equipment: DIGITAL SLPE LECROY.

2. Test Conditions: CH-12; COLOUR BARS; 70dB FROM RF INPUT

3. TV Condition: PICTURE AND AUDIO : SETTINGS → FACTORY PRESETS

Waveform:

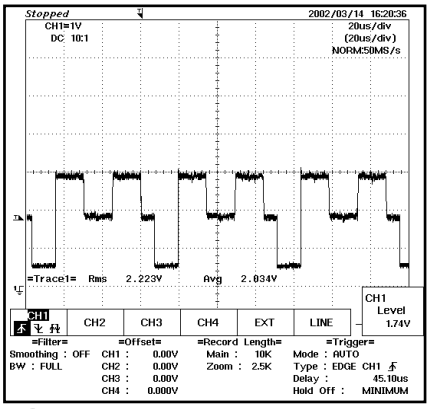

1 Pin1 Vp-p= 2.5V

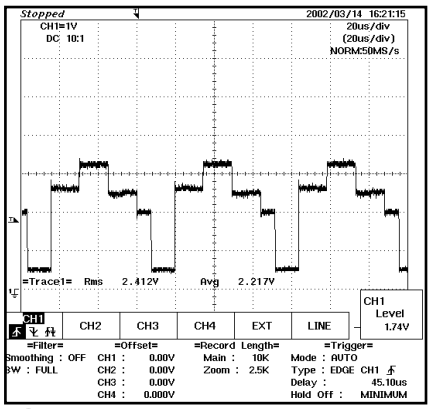

2 Pin2 Vp-p= 2.8V

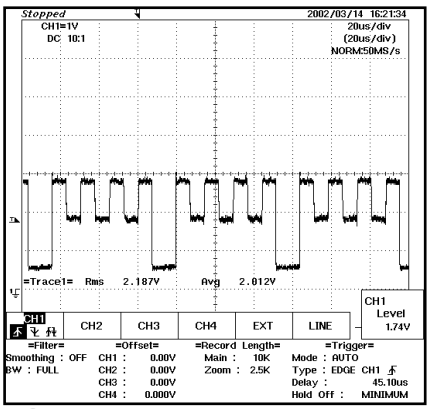

3 Pin3 Vp-p= 2.4V

www.rtv-horvat-dj.hr

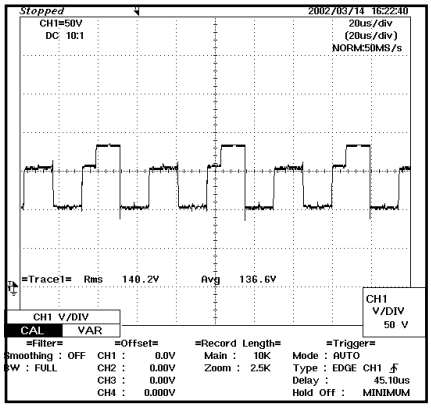

4 Pin4 Vp-p= 80V

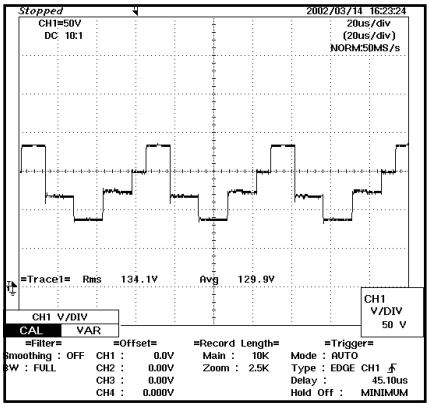

5 Pin5 Vp-p= 90V

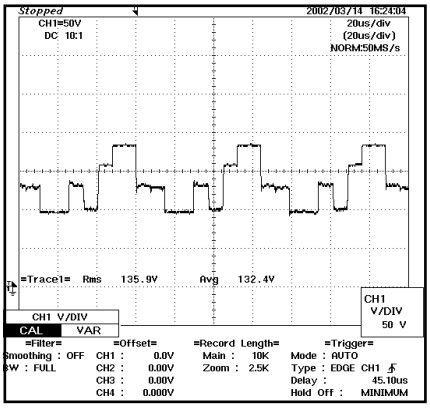

6 Pin6 Vp-p= 80V

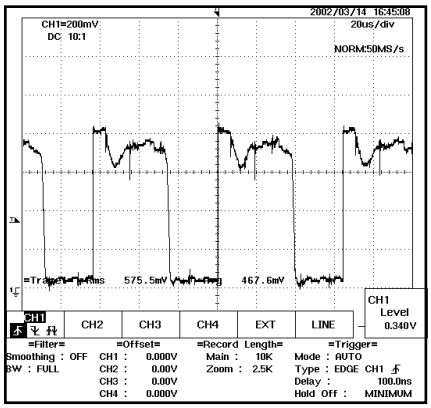

7 Pin7 Vp-p= 0.8V

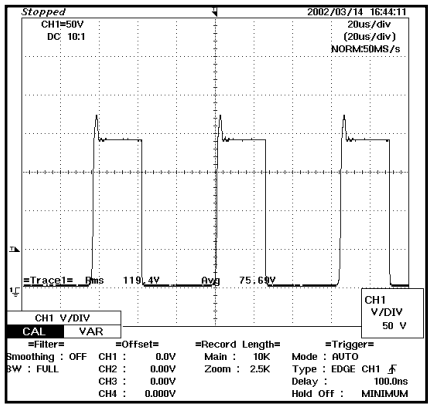

8 Pin8 Vp-p= 225V

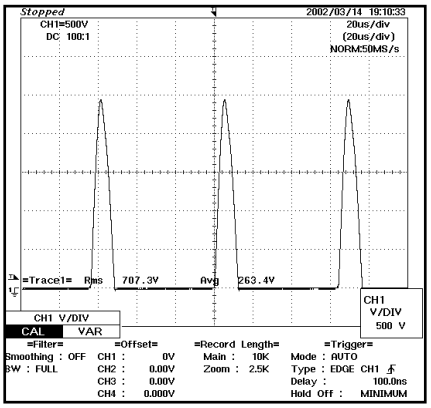

9 Pin9 Vp-p=1200V

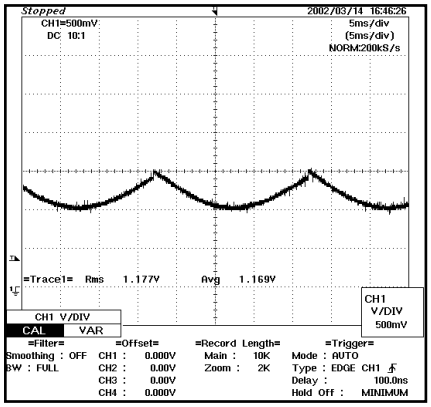

10 Pin10 Vp-p= 0.5V

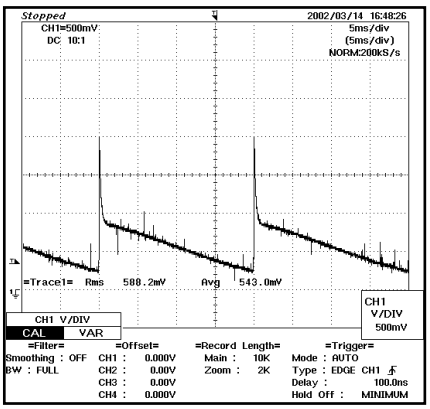

11 Pin11 Vp-p= 1.8V

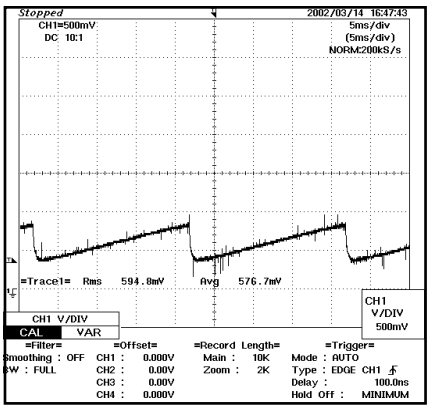

12 Pin12 Vp-p= 0.5V

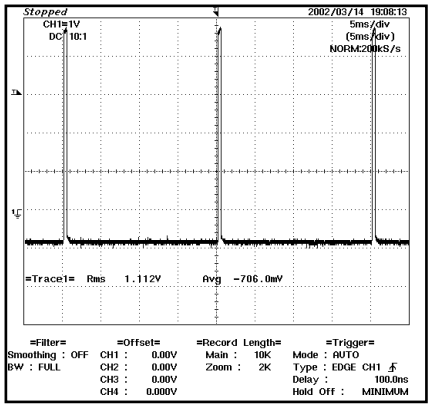

13 Pin13 Vp-p=5.6V

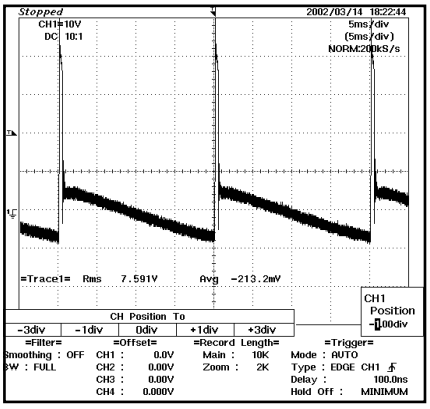

14 Pin14 Vp-p= 58V

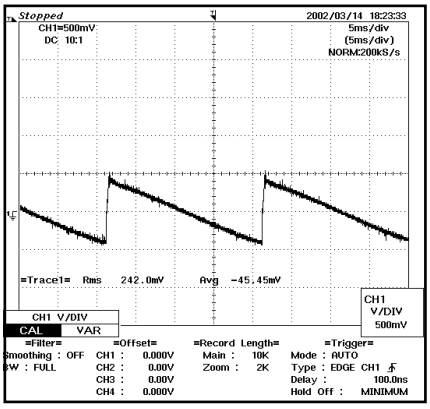

15 Pin15 Vp-p= 0.9V

www.rtv-horvat-dj.hr

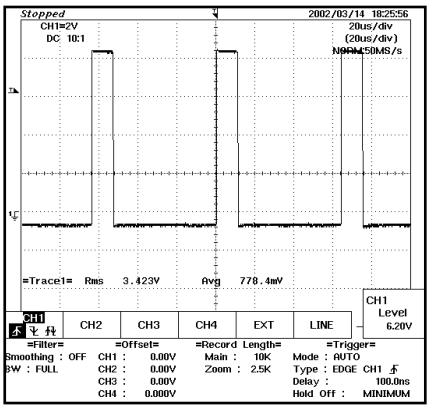

16 Pin16 Vp-p= 9.2V

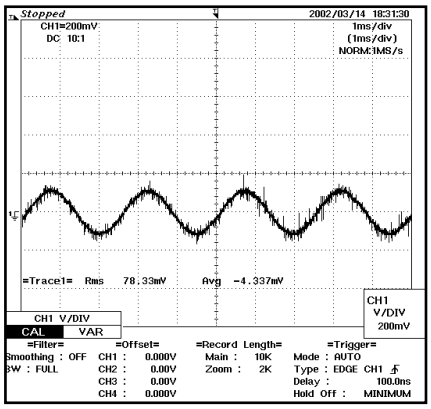

17 Pin17 Vp-p= 0.24V

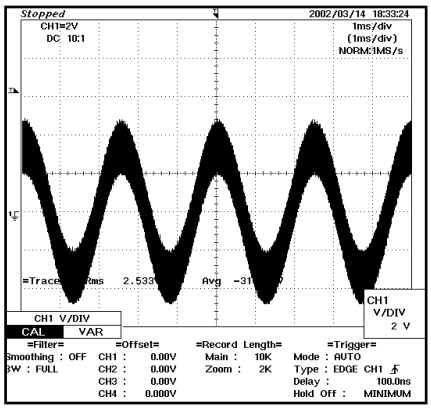

18 Pin18 Vp-p= 9.6V

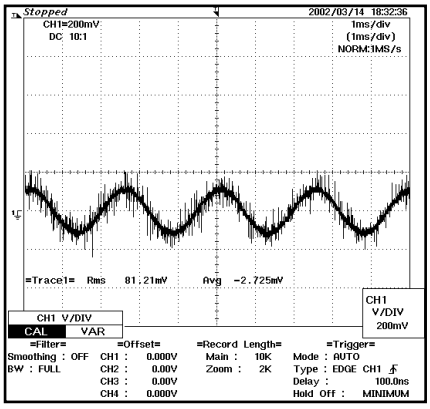

19 Pin19 Vp-p= 0.2V

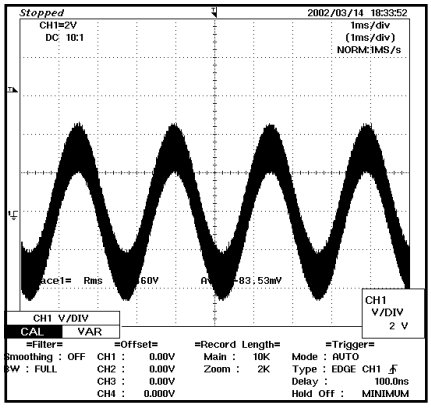

20 Pin20 Vp-p= 9.2V

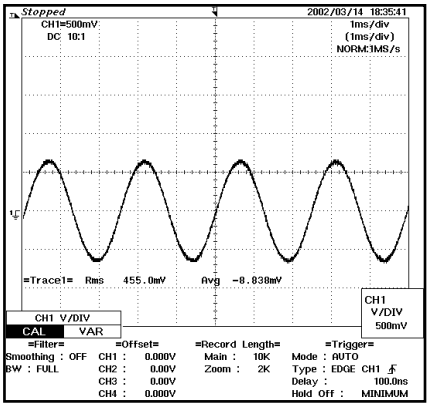

21 Pin21 Vp-p= 1.4V

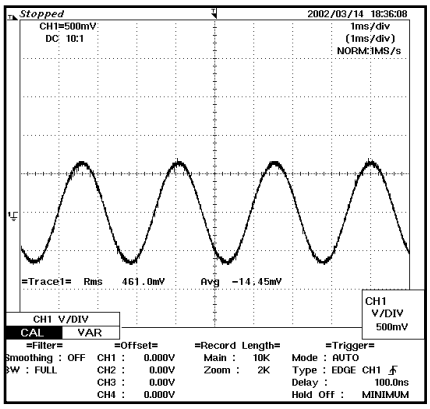

22 Pin22 Vp-p= 1.4V

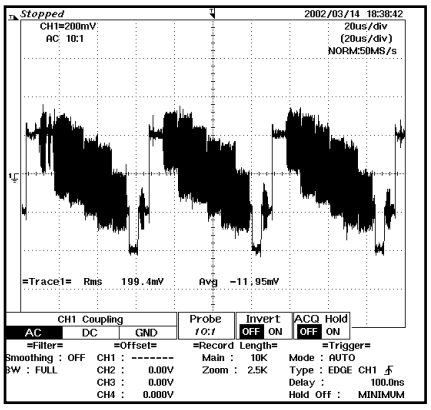

23 Pin23 Vp-p= 0.7V

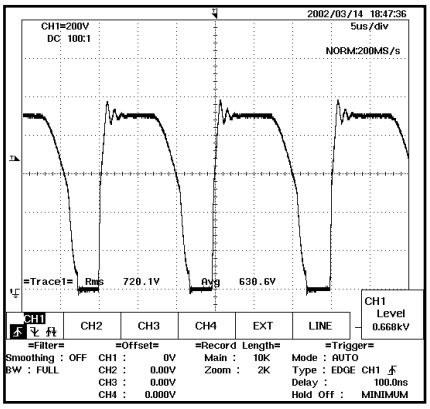

24 Pin24 Vp-p= 500V

www.rtv-horvat-dj.hr